FINEST IN THE FIELD

JOHN SHEARER

Direct Drill

Trash Culti Drill

Operators Manual 128J3

SAFETY

SAFETY FIRST

DO NOT OPERATE THE IMPLEMENT WITH CHAIN DRIVE GUARDS REMOVED

DO NOT ATTEMPT ANY WORK ON THE IMPLEMENT WHILE THE IMPLEMENT IS IN MOTION. (I.E. CLEANING OF BOXES OR LUBRICATION OF DRIVES ETC.

PRIOR TO WORKING UNDERNEATH THE IMPLEMENT (E.G. CHANGING POINTS ETC.) ALWAYS CHECK THAT THE IMPLEMENT IS ADEQUATELY SUPPORTED ON BLOCKS.

JOHN SHEARER LIMITED

CUSTOMER'S WARRANTY REGISTRATION CARD
(Please retain for your records)

IMPLEMENT TYPE: SERIAL No.

SELLING DEALER: DATE PURCHASED:

PLEASE READ OPERATOR'S MANUAL TO ENSURE CORRECT APPLICATION, OPERATION AND MAINTAINANCE FOR THIS MACHINE.

THANK YOU FOR BUYING JOHN SHEARER

WARRANTY REGISTRATION CARD

DEALER COPY

DEALER NAME: …… DEALER TOWN: ……

IMPLEMENT MODEL: …… SIZE: ……

PRODUCT No. (as per price book) SERIAL No.

DEALER'S PRE DELIVERY IMPLEMENT CHECK WHEN DONE SIGNATURE

PURCHASERS NAME (Full)

ADDRESS (Full)

DATE OF PURCHASE: IMP. RECEIVED IN GOOD ORDER & CONDITION

PURCHASER ACKNOWLEDGES THAT THE PURCHASERS ATTENTION HAS BEEN DRAWN TO THE TERMS AND CONDITIONS OF THE JOHN SHEARER LIMITED WARRANTY POLICY ENDORSED HERE-ON.

PURCHASERS SIGNATURE……

WARRANTY REGISTRATION CARD

IMPORTANT:- TO ENSURE YOUR CLIENTS ARE COVERED UNDER WARRANTY YOU MUST FILL OUT THIS PORTION OF THE CARD AND RETURN WITHIN 7 DAYS TO JOHN SHEARER LIMITED
P.O. BOX 32, WELLAND, S.A. 5007

JOHN SHEARER LIMITED AREA MANAGER:

DEALER'S NAME: …… DEALER TOWN: ……

DEALER A/C No.: ……

IMPLEMENT MODEL: …… SIZE: ……

PRODUCT No. (as per price book) SERIAL No.

DEALER'S PRE DELIVERY IMPLEMENT CHECK WHEN DONE SIGNATURE

PURCHASERS NAME (Full)

ADDRESS (Full)

DATE OF PURCHASE: IMP. RECEIVED IN GOOD ORDER & CONDITION

PURCHASER ACKNOWLEDGES THAT THE PURCHASERS ATTENTION HAS BEEN DRAWN TO THE TERMS AND CONDITIONS OF THE JOHN SHEARER LIMITED WARRANTY POLICY ENDORSED HERE-ON.

PURCHASERS SIGNATURE……

CUSTOMER'S MACHINERY REGISTER

We ask for your assistance in registering your holdings of equipment. This information can assist us greatly in after sales service, development of new products and customer awareness of Shearer products.

1. Name:……
   Address:……
   ……State: ……..……..Postcode: ……..……

2. Type of purchaser (please tick) ☐ Owner / Manager ☐ Share Farmer ☐ Contractor

3. Major activities (please number in order of importance)

☐ Sheep and cereal grain	☐ Vegetables	☐ Sugar
☐ Sheep only	☐ Poultry	☐ Tobacco
☐ Cereal Grain Only	☐ Pigs	☐ Oilseeds
☐ Meat Cattle	☐ Vineyards	☐ Others (please list)
☐ Milk Cattle	☐ Fruit	☐ ……

4. What is the size of your holding (hectares)? ……
   What is the total area of your crop (hectares)? ……
   What is your area under cereal crop (hectares)? ……

5. In what town is your associated Shearer dealer? (i.e. either the dealer with whom you normally trade or the one who is closest)

6. What John Shearer machines do you currently have on your property?

Serial No.	Implement type	Size	Date Delivered	Comments
			…../…../……	
			…../…../……	
			…../…../……	
			…../…../……	
			…../…../……	
			…../…../……	

Thank you for your assistance; please feel free to use the back of this form to make any comments you wish.

PRE-DELIVERY CHECK

1. On delivery of DIRECT DRILL ensure there are no shortages.

2. Check Implement equipment, to ensure as ordered.

3. Check for trans-shipping damage.

4. Refer to lubrication section, page 18, for greasing and routine check points.

5. Check and tighten bolts and nuts, (including wheel nuts).

6. Check tyne spacing. For specific dimensions refer to page 11-15.

7. Ensure that implement is fully assembled and operating correctly.

8. Demonstrate and explain operation to the client.

9. Explain terms and conditions of Warranty to client

Congratulations on the purchase of your new JOHN SHEARER LIMITED implement. You have just joined the growing number of John Shearer customers and we trust that your implement will give you many years of satisfaction. The following information contained in this manual is provided with regards to your implement's operation, maintenance and warranty; however, should you require further assistance, contact your registered John Shearer Dealer.

WARRANTY POLICY

JOHN SHEARER LIMITED (JSL) warrants to purchaser that in normal use if any part of goods manufactured by JSL is proved to be defective material such part will be replaced or repaired by JSL if returned to Dealer at cost of customer within 12 months of delivery of goods, but such warranty shall to the extent permissible by law cease to apply forthwith if goods are misused or used contrary to recommendations of JSL and/or Dealer or if any unauthorised alterations, modifications or substitution of any part of goods is made or there is any breach by customer of the terms and conditions.

Customer agrees that JSL shall not be liable for any claim for damages due to loss of time in use of goods or loss of profits due to defective goods or for any other consequential damages whatsoever except to the extent that such exclusion of liability is prohibited by law.

All failures must be reported immediately by the purchaser to the Dealer (or in the event of the Dealer ceasing to hold the JSL franchise, then to the Dealer nominated by John Shearer Limited).

The only parts which would be replaced or repaired under warranty are those which are proven to be of defective materials by persons in authority in the JSL Field Service Department.

It is the policy of JSL to continually strive to improve their products whenever possible. Therefore, JSL reserves the right at all times to modify it's products or parts without notification and undertakes no liability to modify products sold, to conform with any such modifications.

Travelling and kilometre charges are not accepted by JSL as JSL has no control where equipment is sold.

Nothing in this warranty policy and instructions shall purport to exclude or limit any liability the exclusion or limitation of which is prohibited or rendered void by the Trade Practices Act 1974 as amended or any other Federal or applicable State Legislation.

All pre-delivery checks must be done by the Dealer and signed when completed on the Warranty Registration Card.

FREIGHT: The JSL policy does not extend to cover freight charges.

SERVICE & MAINTENANCE: It is the responsibility of the owner to read the Operator's Manual and to maintain and operate the implement in a safe and correct manner within the manufacturer's specified capacity and operating limitations. Using the implement for purposes other than those for which it is designed voids all warranty.

Regular service to your implement can save costly repairs and save valuable time lost because of breakdown.

Resultant damage or failures originating from neglect of machine is not covered under warranty. For your spare part requirements contact your John Shearer Dealer.

JOHN SHEARER LIMITED

ESTABLISHED 1877
INCORPORATED IN SOUTH AUSTRALIA

HEAD OFFICE & FACTORY
BOX 32 WELLAND
SOUTH AUSTRALIA 5007

TELEPHONE +61 8 8268 9555
STREET LOCATION SHARE STREET, KILKENNY
FAX No. +61 8 8268 1103 (SPARE PARTS)
Website: www.johnshearer.com.au
Spare parts email: spares@johnshearer.com.au

WHEN ORDERING SPARE PARTS PLEASE STATE:

1. **MODEL, SERIAL NUMBER & SIZE (OF THE MACH. / IMP.)**
2. **PART NUMBER AND DESCRIPTION (OF THE SPARE PART).**
3. **NUMBER OF PARTS REQUIRED.**
4. **FORWARDING INSTRUCTIONS.**
5. **CORRECT NAME & ADDRESS OF DESTINATION.**

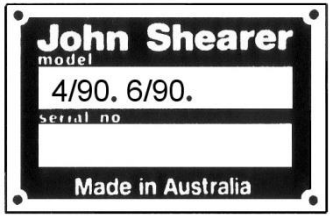

MODEL & SERIAL NUMBER PLATE
IS PLACED ON THE LEFT HAND FRONT OF THE MAIN FRAME.

MADE & PRINTED IN AUSTRALIA BY JOHN SHEARER LIMITED.

M128J3 JULY 2009

CONTENTS

SPECIFICATIONS

No. of SOWING ROWS		20	21	24	27	28	33
SOWING SPACING:		180mm (7”)					
SOWING WIDTH:	m	3.6	3.8	4.3	4.9	5.0	5.9
	ft	11’10”	12’6”	14’2”	15’11”	16’6”	19’6”
TRANSPORT WIDTH (2 Bin):							
	m	5.04	5.04	5.61	6.15	6.26	7.48
	ft	16’6”	16’6”	18’5”	20’2”	20’6”	24’7”
TRANSPORT WIDTH (4 Bin):							
	m			5.70	6.46		
	ft			18’8”	21’2”		

HEIGHT (with handrail removed) - measured to the top of the hopper lid (with tynes on ground).
2 Bin TCD Standard Model 1.8m (5’11”)
2 Bin TCD Raised Box Model 2.2m (7’1”)
2 Bin Direct Drill Model 2.2m (7’1”)
24 & 27 Row 4 Bin Model: 2.39m (7’10”)

TYNE ASSEMBLIES 620 spring release, clamp-on tyne assembly; edge-on; greaseable, hardened, replaceable pivot pins and bushes

TYNE BREAKAWAY FORCE:

Edge-On Tynes 620	16mm diameter spring + 12mm inner spring adjustable to < than 1112N (250lbs).
Edge-On Tynes 580	16mm diameter spring adjustable to a maximum 740N (165lbs).
Fluted Tynes	13mm diameter spring adjustable to a maximum 455N (100lbs).

MAXIMUM TYNE JUMP HEIGHT
300mm (12”)

MAXIMUM WORKING DEPTH
150MM (6”) to 190mm (7½”)

No. of SOWING ROWS		20	21	24	27	28	33
BOX CAPACITY: 2 Bin							
Front – seed	kg	486	510	587	660	684	794
(wheat)	lb	1074	1124	1297	1455	1511	1748
Rear – fertilizer	kg	810	850	978	110	1141	1345
(super)	lb	1790	1870	2161	2420	2521	2959
Weight Empty -	kg	1920	2620	2300	2850	2670	3080
(approx.)	lb	4230	5760	5060	6270	5870	6775

BOX CAPACITY: 4 Bin				
Front	1 – seed	kg	492	512
	(wheat)	lb	1085	1129
	2 – fert.	Kg	539	606
	(super)	lb	1188	1336
Rear	3 – seed	kg	248	279
	(wheat)	lb	547	615
	4 – fert.	kg	564	634
	(super)	lb	1243	1398
Weight Empty -		kg		
(approx.)		lb		

No. OF ROWS OF TYNES: 4 (20,24 & 28), 6 (21, 27 & 33)

TYNE SPACING (Standard 4 Row Direct Drills)

Between Rows	1-2	890mm (35”)
	2-3-4	705mm (27¾”)
Along Rows (Typical)	720mm	
Along Rows (Overall)	180mm (7”)	

TYNE SPACING (Standard 6 Row Direct Drills)

Between Rows	1-2-3	445mm (17½”)
	3-4-5-6	470mm (18½”)
Along Rows Overall	180mm (7”)	

TYNE SPACING (6-90 Trash Culti Drill Only)

Between Rows	1-2-3	445mm (17½”)
	3-4-5-6	470mm (18½”)
Along Rows	540mm	
Min. Diagonal	530mm	
Max. Diagonal	590mm	
Overall	90mm	
Sowing Rows – Variable	180mm (7”) or 270mm (10½”)	

UNDERFRAME CLEARANCE
580mm (23”) to 620mm (24½”)

ROAD CLEARANCE UNDER TYNES (With Standard 4” Points)
300mm (12”) to 250mm (10”)

SEED & FERTILISER DISTRIBUTORS:

Seed -	Fluted roller with restrictor for small seeds, low rates
Fertilizer -	Nylon peg tooth distributor roller.
Gates -	Adjustable rubber in both compartments.

WHEEL EQUIPMENT:
20 Row: 16.9 x 28 x 8 Ply
21 Row: 16.9 x 28 x 8 Ply
24 Row: 16.9 x 28 x 8 Ply
24 Row 4 Bin: 18.4 x 30 x 8 Ply
27 Row: 18.4 x 30 x 8 Ply
27 Row 4 Bin: 23.1 x 30 x 10 Ply
28 Row: 18.4 x 30 x 8 Ply
33 Row: 23.1 x 30 x 10 Ply

GEARBOX: Fully enclosed 31 speed oil bath gearbox, with external change gears, for both compartments.

OPTIONAL EQUIPMENT:
Spring Tooth Harrows
Broad Bean Rollers
Super Seeder Points
Grass Seed Box
580 Tyne (replaces 620 Tyne)
Tyne Extension Kit
Swivelling Coulter
4 Tyne Extension Kit
Agitator Kit

Due to our policy of continuing research, these specifications are subject to change without prior notification.

Congratulations on the purchase of your new DIRECT DRILL / TRASH CULTI DRILL.

This manual has been prepared to assure the proper set up, operation and trouble free service.

After reading this manual, keep it in the carrier provided on the implement for quick and easy reference should any question arise concerning operation or service.
Your DIRECT DRILL / TRASH CULTI DRILL is designed to give maximum service life, but a routine lubrication and maintenance schedule must be followed as shown on the lubrication chart (see page 18)

SETTING UP INSTRUCTIONS
The following steps should be taken to achieve satisfactory operation of this implement.

HYDRAULIC CYLINDERS
Phasing is achieved by fully raising the implement and allowing oil to flow through the circuit for a few seconds. If necessary repeat until phasing is achieved. (refer HYDRAULICS pages 42-43)

IMPLEMENT LEVELING “FRONT TO REAR”
This is accomplished by turning the levelling screw assembly, which is located at the rear of the hitch.
Clockwise rotation will raise the front of the implement.

IMPLEMENT LEVELING “SIDE TO SIDE”
A screw adjustable ram lug on the right hand side of the implement is adjusted to level the implement.

DEPTH STOP / ADJUSTMENT
Set the depth stop provided on the right hand (master) cylinder according to the required working depth.

TYNE SPRING TENSIONS
Set tyne spring tensions equally on each row.
Tynes on the front two rows are more likely to need tension. To avoid higher loads than necessary on the tyne assembly components, use the minimum spring tension that will achieve the penetration required.

SOWING ROW SPACING AND HOSE CONNECTION
The John Shearer 6 ROW TRASH-CULTI DRILL has been designed to allow relatively simple conversion between two alternative row spacings 180mm and 270mm.
180mm spacing is achieved by sowing on the 3rd, 4th and 5th rows of the implement. 270mm spacing is achieved by sowing on the 5th and 6th rows.

Tyne hose conversions for each alternative are illustrated on page 11 (for the 21 row implement). Starting from the centre, this same pattern applies to the 27 and 33 row implements.

To convert 180mm to 270mm spacing proceed as follows:-

a) Lower the implement frame onto safe rests, or so that all tynes rest on level ground. Remove the secondary chain drive guard. Remove all sowing hoses from the boots on the 3rd, 4th and 5th sowing rows. If the implement is only to be used for sowing on the two rear

rows, remove boots from the 3rd and 4th rows. Fit sowing boots to the 6th row.

b) Unbolt the grain and fertiliser box and move it rearwards. Re-bolt in the alternative position provided, and connect the sowing hoses as shown in the illustrations on page 11.

c) Extend grain and fertiliser chains with extra chain.

TURNING

Avoid turning sharply with points in the ground. At corners, lift them out of the ground. The sowing of headlands will then eliminate oversowing on corners.

SOWING RATES

Select sowing rates as per chart on left hand side of implement. (also see page 22)

N.B. This Chart is to be used as a guide only. Sowing rates may be checked using the table and information on page 17.

GEARBOX SETTINGS

The JSL gearbox has 31 settings for each box compartment of the drill. These settings are shown on the Grain and Fertilizer Chart on page 22, together with a guide to the output for the various products when using the different settings.

Procedure for selecting gear settings on the JSL gearbox:

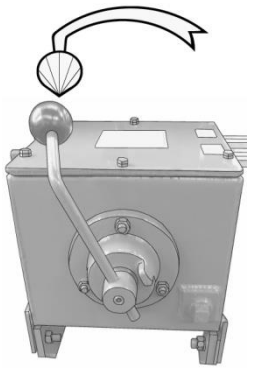

1. Disengage the gearbox: Move the handle across and out as shown.

2. Select Letter Gears for the front box (eg. For setting A5 on the chart, move the selector so that “A” is the letter on the edge of the housing)

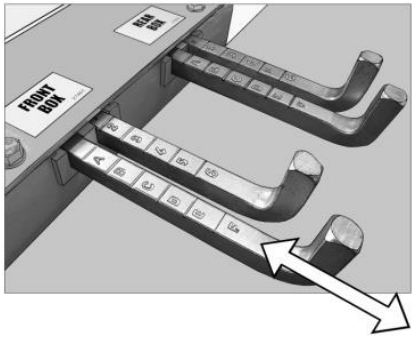

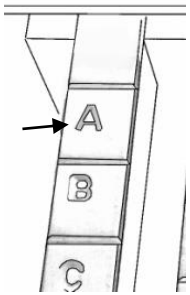

3. Select Number Gears for the front box (eg. For setting A5 on the chart, move the selector so that “5” is the number on the edge of the housing)

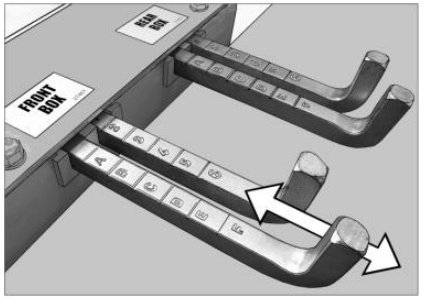

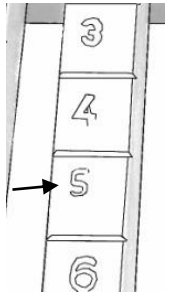

4. Repeat steps 2 and 3 for the rear box selectors.

5. Engage the gearbox: move the handle back all the way to the stop, as shown.
   Please Note: Do not force the handle. If the handle does not easily move all the way to the stop, it may be necessary to move the gear selectors slightly.

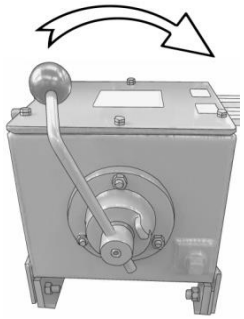

GATE SETTING

The seed and fertilizer metering rollers have an adjustable gate at the metering point under the roller. This adjustment allows for the diversity in size of seed and types of fertilizer. To ensure accurate metering of material, it is essential that these gates be correctly adjusted in accordance with the information supplied below.

Gauges for Setting Gap

# 29939	Gauge gate 3mm	Fluted roller
# 23470	Gauge gate 1.5mm	Peg roller
# 33657	Gauge gate 4mm	Broad bean roller

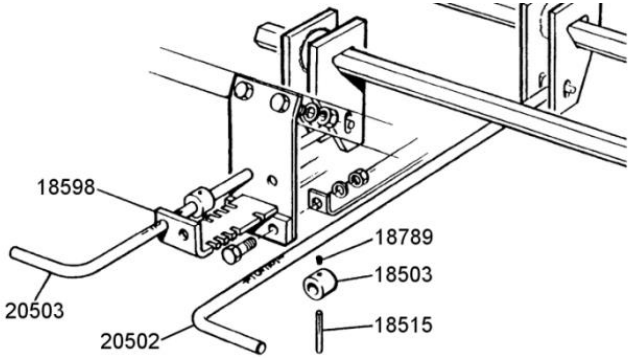

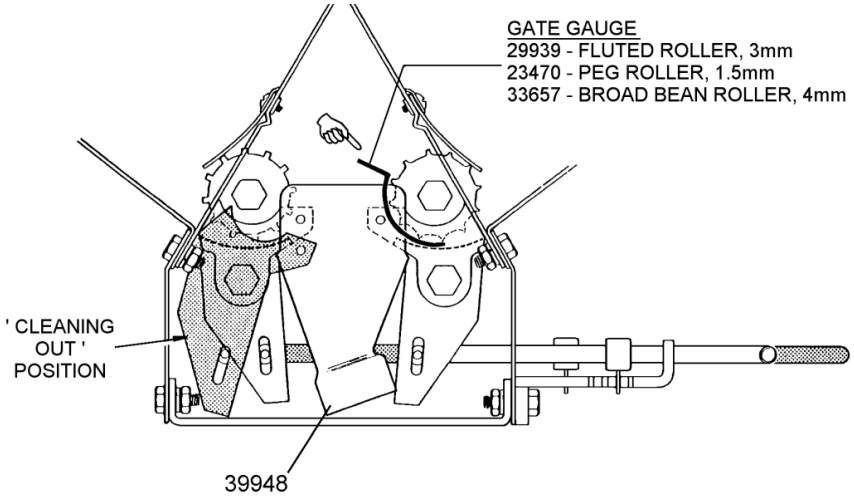

Procedure for resetting gates if required:

1. Remove the sowing cups part number 39948.
2. Loosen collar part number 18503 on gate levers and disengage pin part number 18515 from bracket assembly part number 18598.
3. Obtain a spanner to fit the gate shafts. (20mm)
4. With one hand place the gauge between the lip of the gate and the roller.
5. With other hand move the gate shaft using the spanner until the gauge fits nicely between roller and the gate (rather like a feeler gauge)
6. Do not have too tight, otherwise the edge of gate will wear on rollers.
7. When you have the gauge (as selected) in this position, you have gate setting **one (1).**
8. For placing the pin part number 18515 in position **one (1)** on bracket part number 18598 and tightening socket screw

part number 18789 – it is preferable to have the help of another person.

9. Note the gate levers when set in position **one (1)**, are in a different relationship to each other.

GRAIN AND FERTILISER BOX CAPACITIES

The two or four compartments of the box are unequal in volume. This feature allows whichever material is being used in higher quantities to be placed in the larger compartment/s. Filling the front compartment with the heavier material will improve stability. The relative volumes for 2 bin machines are 45% front and 55% rear while for 4 bin machines the ratios are approximately 27% (bin 1), 29% (bin 2), 13% (bin 3) and 31% (bin 4).

Where more than one compartment is being used for the same material, optimum use is made of the box capacity if the sowing rates selected for each compartment are in the same ratio as the compartment volumes.
i.e. the rear rate (2 bin) should be 1.22 times the front.

For example: If a sowing rate of 100 kg/ha is required, the sowing rates selected for the front compartment should be 45kg/ha and for the rear 55kg/ha.
This will provide, as near as possible, simultaneous emptying of both compartments.

The approximate volumes for 2 bins (in litres) are:

Rows	**20**	**24**	**28**	**21**	**27**	**33**
Front	608	724	855	638	825	1013
Rear	744	899	1048	782	1010	1237

The approximate volumes for 4 bins (in litres) are:

Rows	**24**	**27**
1 (front)	492	553
2	539	606
3	248	279
4 (rear)	564	634

[Note: To find the capacity of a product in kg, multiply the density (kg/litre) by the volume (litres).]

DISTRIBUTORS

The peg tooth distributor (fitted in the rear compartment of a 2 bin and compartments 2 and 4 of a 4 bin implement) and the fluted distributor (fitted in the front compartment of a 2 bin and compartments 1 and 3 of a 4 bin implement) may be used for either grain or fertiliser.
Fertiliser is usually placed in the rear compartment and grain in the front compartment. For low rates with small seeds use the fluted rollers with restrictors (refer chart page 22)

* DO NOT USE THE RESTRICTOR WITH FERTILISERS.

NOTE: For broad beans, a special distributor is available. (see page 35)

CLUTCH CABLE SETTINGS

Clutch cable length is adjusted to provide full clutch engagement when tynes are just above ground entry position. If re-adjusting the cable to provide disengagement at lower levels, ensure that cable is not over tensioned at transport position.

HYDRAULICS

The hydraulic circuit on this implement consists of three “series connected” hydraulic cylinders. (see page 42).

A “master” 4” diameter x 12” stroke cylinder is fitted to the right hand side of the implement. Oil from this cylinder flows to a 3 ¾” diameter x 12” stroke cylinder fitted to the left hand side of the implement. When a hydraulic depth adjustment is made these unequal diameter cylinders provide equal amounts of travel at both wheels.

Oil from the left hand 3¾” x 12” cylinder flows to a 4¼” x 8” cylinder which is fitted to the rear of the implement hitch. This cylinder automatically adjusts the height of the hitch as the wheel positions are altered, and maintains a “parallel lift” throughout the working depth range of the implement.

Each cylinder is fitted with a by-pass port, which ensures automatic phasing of the three cylinders when they are fully extended. This automatic correction will allow for any minor leakage in any of the cylinders during work. To achieve automatic phasing, simply raise the machine to full height and hold the tractor control valve in the delivery position for a few seconds. Such specific correction will seldom be necessary because all cylinders will enter the re-phasing mode every time the implement is raised to full transport position (at headlands, returning to refill etc.).

A mechanical depth stop is fitted to the right hand (master) cylinder (ref. page 42). To maintain a pre-determined sowing depth, use this depth stop to limit the maximum depth to which the implement can be lowered. Operators should appreciate that with the depth stop set, the implement cannot be “lowered further” to obtain increased penetration in occasional hard soil patches.

IMPORTANT:

The hydraulic circuit on this implement, like all hydraulic circuits, requires clean oil to function reliably. Always ensure that the tractor filter cleanliness is maintained, and that tractor to implement breakaway couplings are cleaned before connecting. Contaminated oil is likely to result in a scored barrel and damaged piston seals.

GUARDS

Ensure guards are replaced after servicing chains, particularly over drive from gearbox to Grain and Fertiliser box. Larger seed e.g. Lupins, can lodge in chains when box is filled when guard is missing, thus causing shaft damage.

Caution: Guards must <u>always</u> be securely fitted when the implement is in use (including calibration) to reduce the risk of injury due to clothing or body parts being caught in the drive system.

STORAGE

At seasons end, this implement should be stored away, jacked up and placed on blocks to take the weight off the tyres.

It should be thoroughly cleaned, removing all traces of seed or fertilizer from compartments and distributors.

Fill gearbox with oil.

Remove chains, clean, lubricate and store in a clean, dry location.

Grease all bearings and clutch.

Touch up scratched or damaged paintwork.

FERTILISER - CORROSION DAMAGE

The hopper must be “COMPLETELY AND THOROUGHLY CLEANED OUT” after use, to help prevent corrosion. It is especially important that the hopper is not left overnight with any fertilizer remaining in it. Particular attention should be paid to keeping the area around the critical distributor/bearing/gate components free of fertilizer
This recommendation is applicable irrespective of the kind of fertilizer in use, but is more important with the higher analysis, high nitrogen, fertilizers.

HOSE CONNECTIONS

Although the illustrations below show the 21 row TRASH CULTI DRILL (TCD) sowing boot connections, the same hose pattern applies to the 27 and 33 row TCD implements. (However it does not apply to Direct Drill implements)

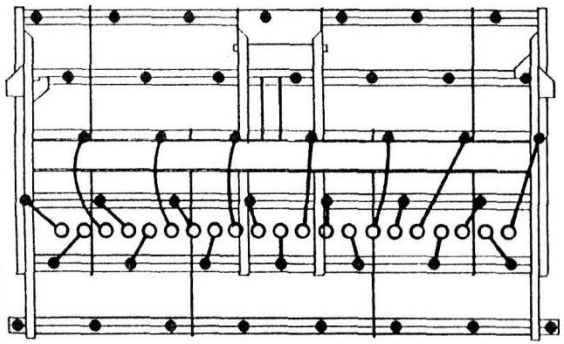

FOR 180mm SPACING.
Sow on rows 3, 4 and 5.
Connect hoses as illustrated above.

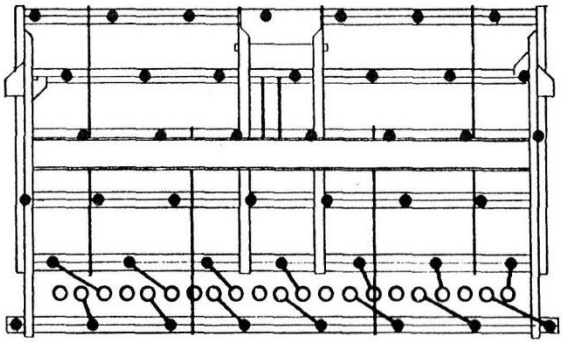

FOR 270mm SPACING.
Sow on rows 5 and 6.
Connect hoses as illustrated above.

TYNE SPACING

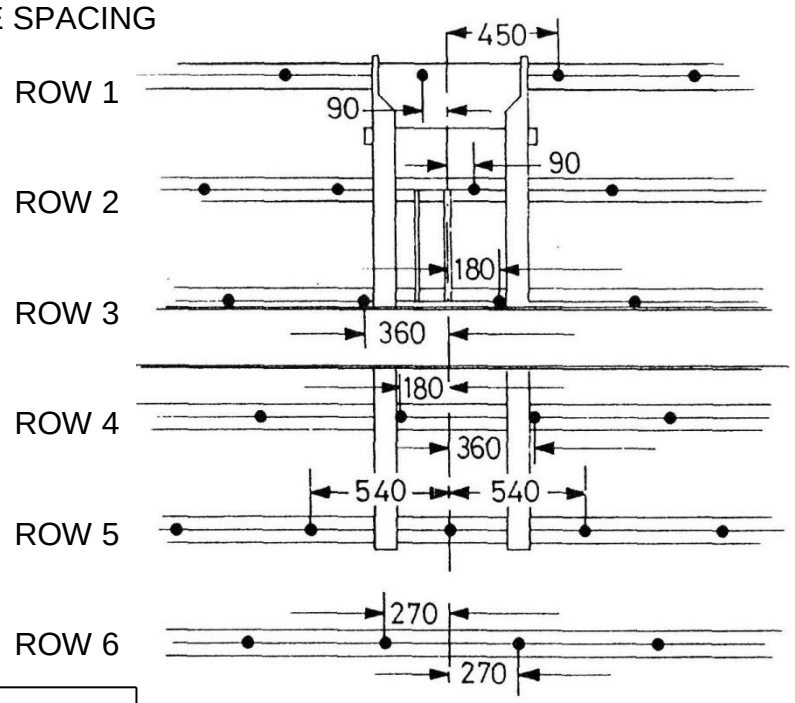

TYNE SPACING – TRASH CULTI DRILL (SOWING & CULTIVATING TYNES)
FROM THE CENTRE LINE OF THE FRAME, PLACE CENTRE TYNES TO THE DIMENSIONS SHOWN (ILLUSTRATION ABOVE) AND THEREAFTER AT 540mm CENTRES.
THIS APPLIES TO 21, 27 AND 33 ROW IMPLEMENTS, WITH 90mm TYNE SPACINGS

DIRECT DRILL TYNE LAYOUT: SOWING ON ALL ROWS, 180mm SPACING

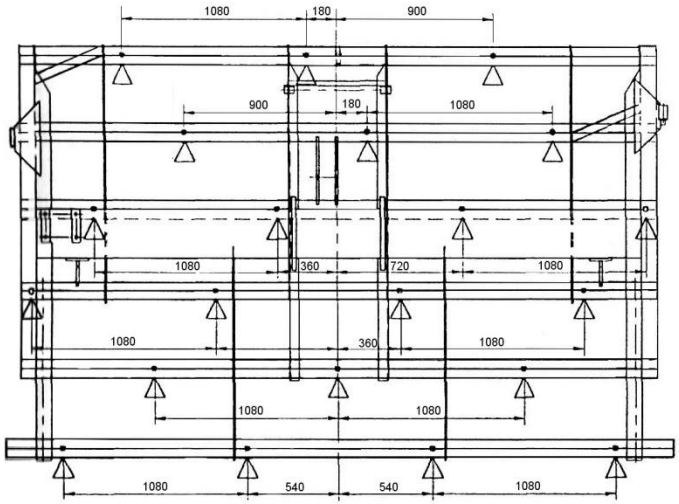

21 ROW

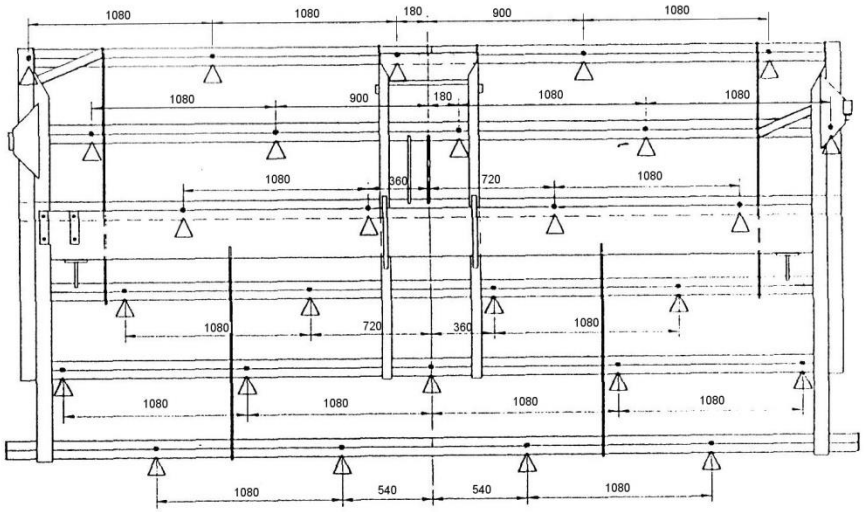

27 ROW

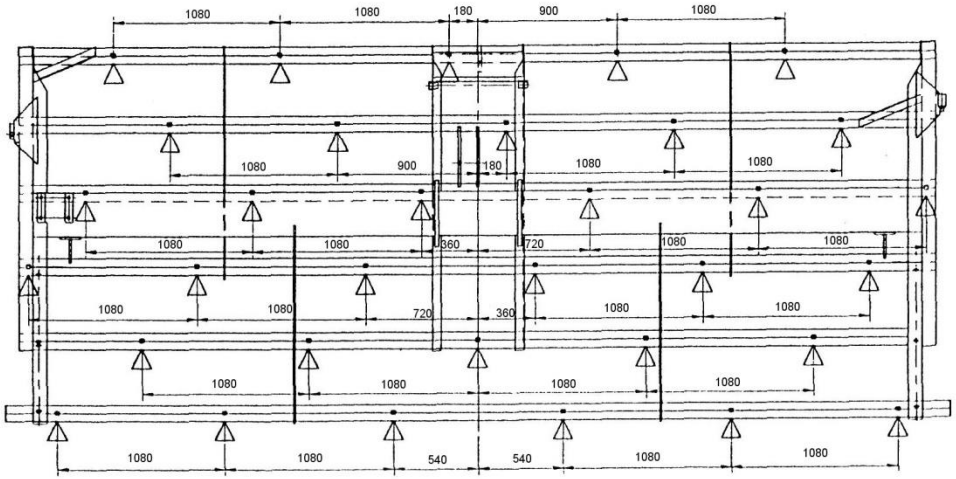

33ROW

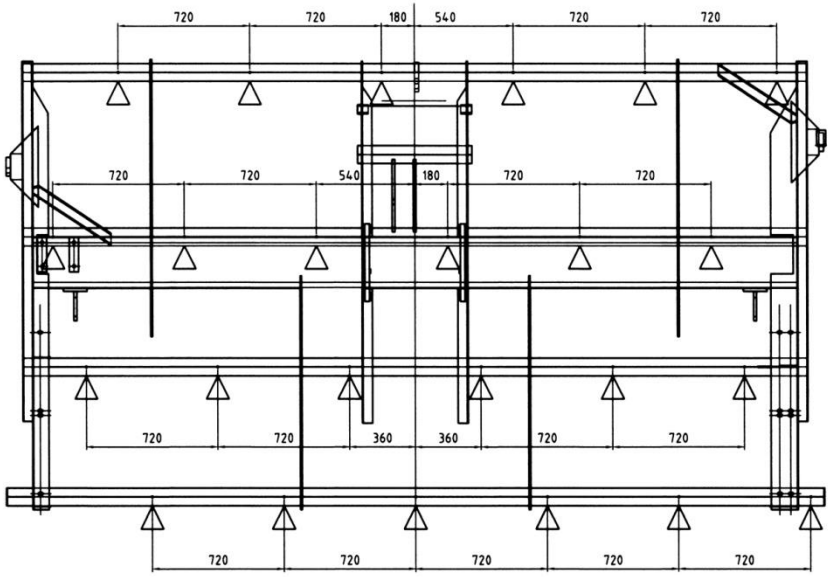

24ROW

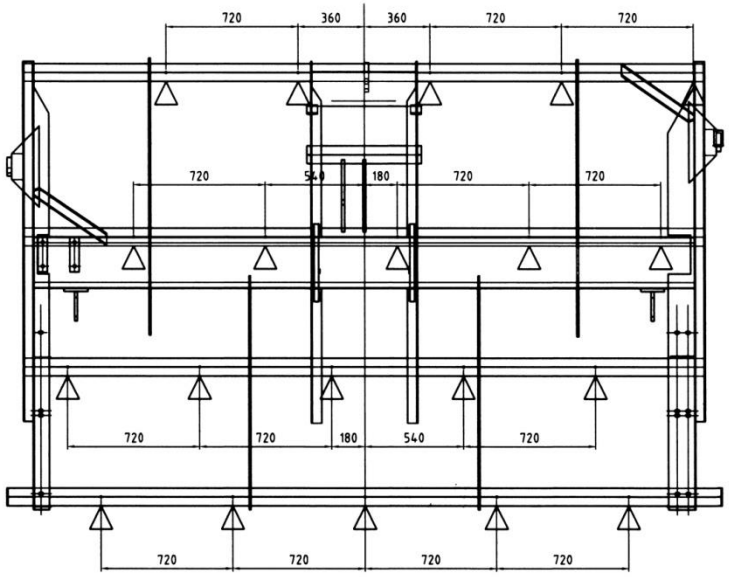

20ROW

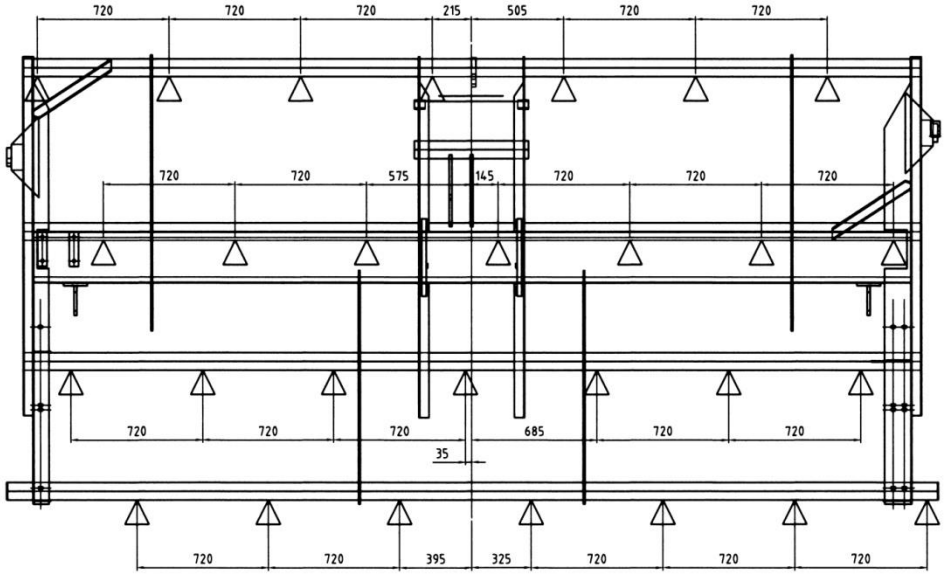

28ROW

DIRECT DRILL TYNE LAYOUT:
27 ROW WITH 2 TYNE EXTENSIONS ON BOTH SIDES
TYNES ON ALL ROWS (SPACING 220mm)

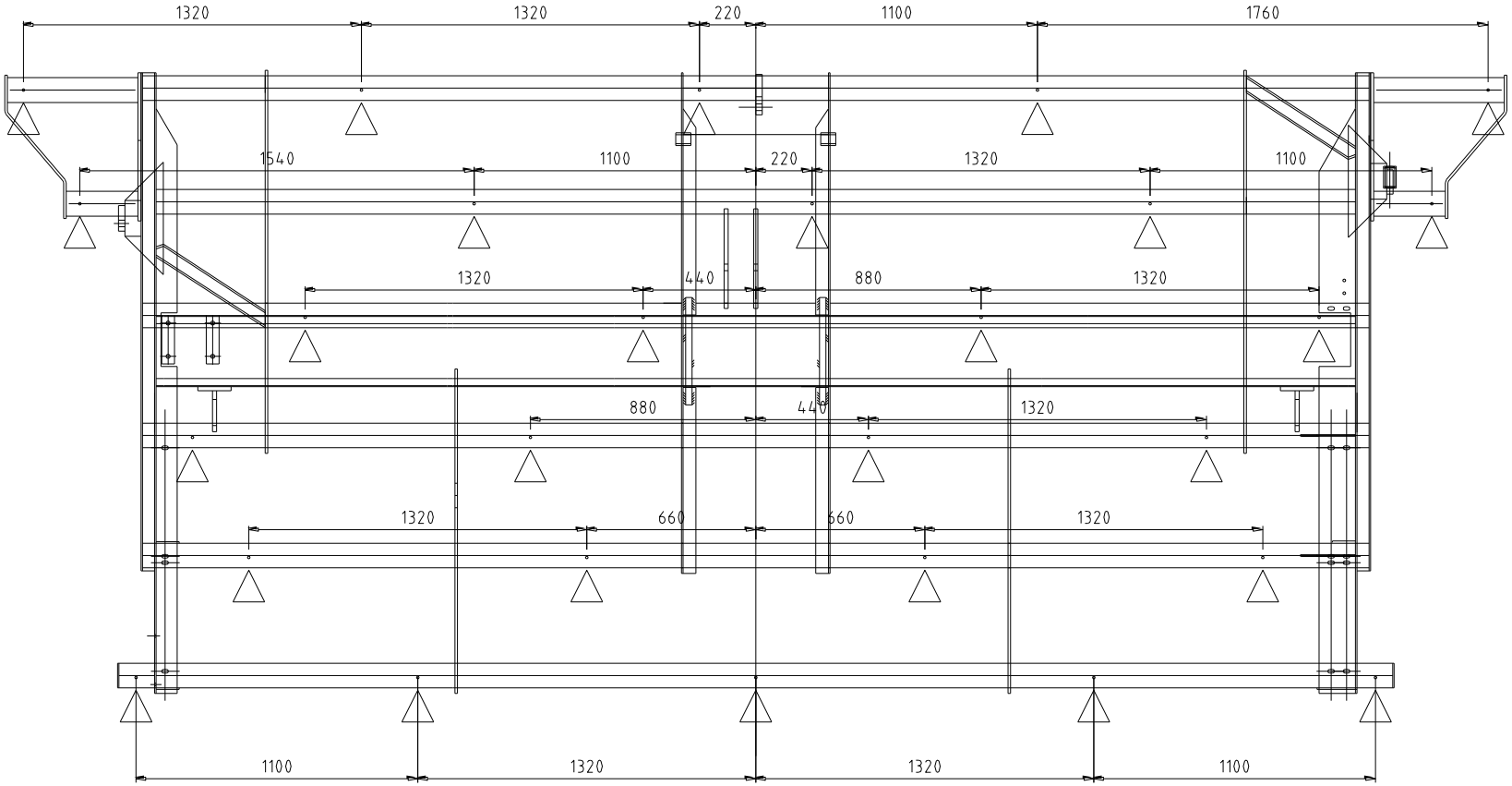

Note: The change to the sowing width with the extra extensions also requires a change in the size of the primary drive sprocket to correct the sowing chart readings. See table on page 16

DIRECT DRILL TYNE LAYOUT:
SHOWING 27 ROW WITH SWIVEL COULTERS ON ROW 1 & 2, SOWING TYNES ON 3, 4, 5 & 6 (SPACING 180mm)

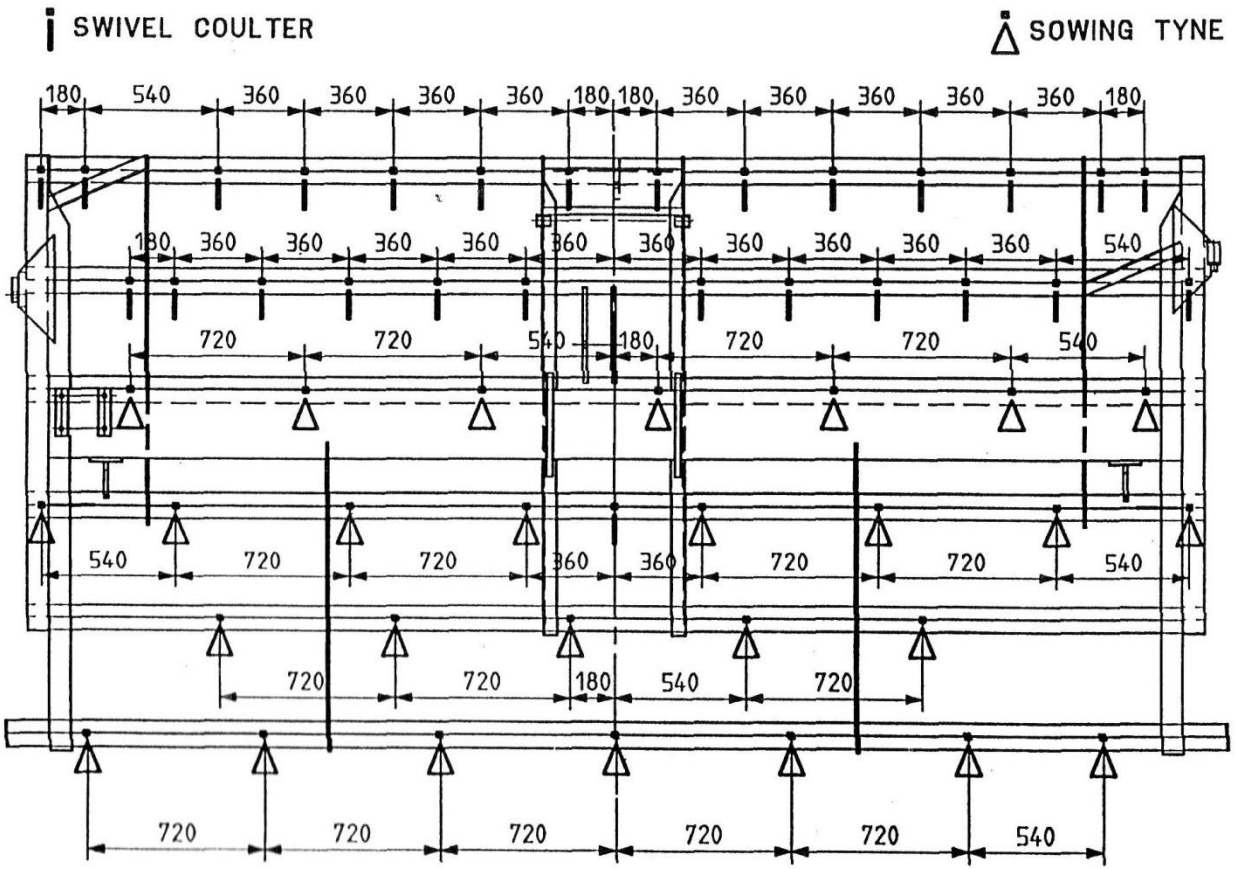

SAFETY FIRST

DO NOT OPERATE THE IMPLEMENT WITH CHAIN DRIVE GUARDS REMOVED.

DO NOT ATTEMPT ANY WORK ON THE IMPLEMENT WHILE THE IMPLEMENT IS IN MOTION. (I.E. CLEANING OF BOXES OR LUBRICATION OF DRIVES ETC.).

PRIOR TO WORKING UNDERNEATH THE IMPLEMENT (E.G. CHANGING POINTS, ETC.) ALWAYS CHECK THAT THE IMPLEMENT IS ADEQUATELY SUPPORTED ON BLOCKS.

DRIVE SETTINGS WHEN USING EXTENSION FRAME KIT

If the optional width extensions are chosen, different primary drive sprocket must be used to compensate for the additional width. Additionally the H1 and H2 values entered into the hectaremeter will also be different. The table below shows the new values.

Primary Drive Sprocket Table – With 2 Tyne Width Extensions on both sides.

	H2	Primary Drive Sprocket		H1
Rows	Width	180mm Spacing Standard	220mm Spacing w/ Extensions	
20R	4.4	28T	23T	4,101
21R	4.62	28T	23T	4,101
24R	5.28	28T	23T	4,101
24R 4 Bin LH	5.28	29T	24T	4,213
24R 4 Bin RH	5.28	13T	15T	-
27R	5.94	26T	21T	4,074
27R 4 Bin LH	5.94	26T	21T	4,053
27R 4 Bin RH	5.94	14T	17T	-
28R	6.16	26T	21T	4,074
33R	7.26	26T	21T	4,053

CALIBRATION OF SOWING RATES

Number of Rows	20 @ 7”	20 @ 9”	21 @ 7”	21 @ 9”	24 @ 7”	24 @ 9”	24 4 bin @ 7”	24 4 bin @ 9”	27 @ 7”	27 @ 9”	27 4 bin @ 7”	27 4 bin @ 9”	28 @ 7”	33 @ 7”
Tyre Size	16.9x28	16.9x28	16.9x28	16.9x28	16.9x28	16.9x28	18.4x30	18.4x30	18.4x30	18.4x30	23.1x30	23.1x30	18.4x30	23.1x30
Sowing Width (m)	3.60	4.60	3.78	4.83	4.32	5.52	4.32	5.52	4.86	6.21	4.86	6.21	5.04	5.94
Rolling Radius (m)	0.665	0.665	0.665	0.665	0.665	0.665	0.724	0.724	0.724	0.724	0.797	0.797	0.724	0.797
Revolutions / hectare	665	520	633	495	554	433	509	398	452	354	411	322	436	336
Wheel rotations (for 1/10 ha)	67	52	63	50	55	43	51	40	45	35	41	32	44	34

To calibrate, use the chart on page 22 or 23 (also found on the left hand side of the drill) as a guide to choose an appropriate gear setting to begin with. Select the size of your drill from the table above. Jack up the (left hand) drive wheel and rotate it the number of times stated in the “Wheel rotations” part of the above table (eg. for a 24 row drill rotate the drive wheel 55 times). Collect and weigh the amount of product that is delivered and multiply it by 10 to get the actual rate per hectare of the current setting (eg. if a 24 row drill outputs 12kg of wheat for 55 rotations of the wheel the rate will be 120 kg/ha). If you do not achieve the rate you require try again for a higher or lower gear setting (depending on whether the rate was too fast or too slow) until you get the correct rate.
If accuracy is important, it is a good idea to check the calibration regularly, as small differences in a product, such as moisture and grain size, can affect the rate.
Be aware that differences in the rolling circumference of the tyre and changes to the sowing width will affect the number of rotations required for an accurate calibration. The following formula can be used to find the correct number of rotations required for calibration:

$$\text{Rotations} = \frac{1000 / \text{Sowing Width (m)}}{\text{Rolling Circumference (m)}}$$

Note: The rolling circumference of the tyre can be found by measuring the distance the drill travels for 1 full rotation of the wheel. (eg. if 1 revolution of a wheel moves a standard 24 row drill 5m, then the rotations required are 1000 / 4.3m / 5m = 46.5)

LUBRICATION

ITEM	INSTRUCTIONS	REFERENCE
WHEEL BEARINGS	GREASE ONCE PER WORKING MONTH	PAGE 26
DISTRIBUTOR BEARINGS	GREASE ALL DISTRIBUTOR BEARINGS WEEKLY	PAGE 34
DRIVE CHAINS	ANNUAL STORAGE MAINTAINANCE	PAGE 36
CLUTCH	GREASE DAILY	PAGE 36
TYNE ASSEMBLIES	GREASE DAILY IN ADVERSE CONDITIONS – LESS FREQUENTLY ACCORDING TO ACTUAL OPERATING CONDITIONS.	PAGE 44 & 46
AXLE ROCKSHAFTS	GREASE DAILY, WITH WHEELS RAISED CLEAR OF GROUND	PAGE 26
GEARBOX OIL	AS PER THIS PAGE – CHECK ANNUALLY	PAGE 18
GREASE NIPPLES	ALL GREASE NIPPLES SHOULD BE LUBRICATED PRIOR TO STORAGE OF THE IMPLEMENT AT END OF EACH WORKING PERIOD.	

ROUTINE CHECKS

- CHECK TYRE PRESSURES (REF, PAGE 19)
- CHECK ADJUSTMENT OF ALL DRIVE CHAINS.
- GENERALLY INSPECT ALL BOLTS AND NUTS FOR TIGHTNESS

DO NOT LEAVE FERTILISER IN THE IMPLEMENT OVERNIGHT.
(PARTICULARY HYGROSCOPIC FERTILISER, WHICH WILL TAKE UP MOISTURE AND HARDEN)

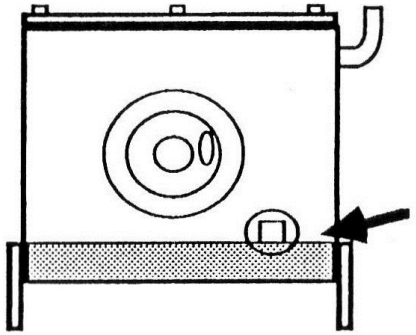

IMPORTANT
CHECK GEARBOX OIL LEVEL ON DELIVERY.
FILL TO OIL LEVEL PLUG USING SAE 120.

TYRE PRESSURES

TYRE PRESSURES ARE IMPORTANT
OVER INFLATION will impair flotation - Increasing sowing depth variations as ground conditions vary. UNDER INFLATION can result in tyre failures.

TYRE SIZE	20R 2 Bin DD	21R 2 Bin DD	21R 2 Bin TCD	24R 2 Bin DD	24R 4 Bin DD	27R 2 Bin DD	27R 2 Bin TCD	27R 4 Bin DD	28R 2 Bin	33R 2 Bin DD	33R 2 Bin TCD
kPa 16.9 x 28 x 8 Ply	130	140	160	160	X	X	X	X	X	X	X
Psi	19	20	23	23	X	X	X	X	X	X	X
kPa 18.4 x 30 x 8 Ply	X	X	X	X	140	130	150	X	130	X	X
Psi	X	X	X	X	20	19	22	X	19	X	X
kPa 23.1 x 30 x 10 Ply	X	X	X	X	X	X	X	100	X	100	110
Psi	X	X	X	X	X	X	X	15	X	15	16

SPEED LIMIT 25 km/h (10 km/h SOWING)

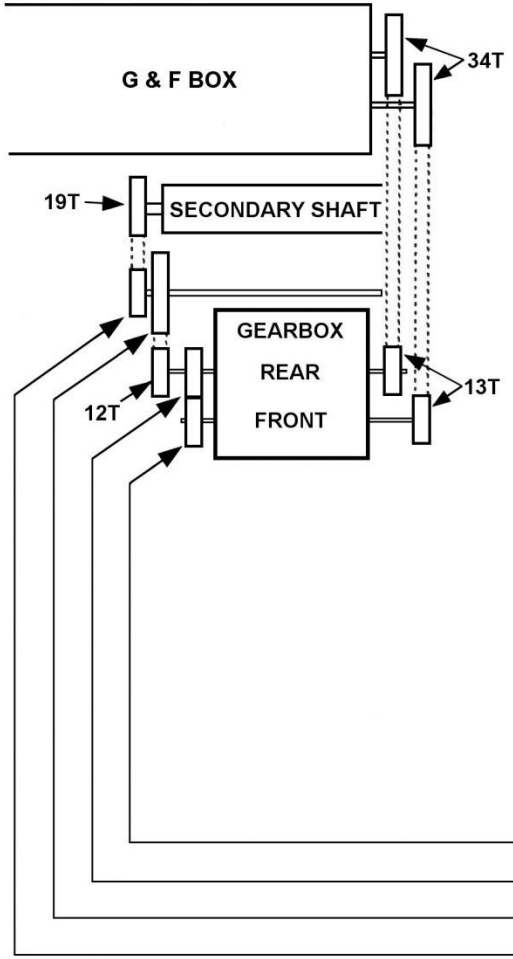

DRIVE FACTOR CHART

A drive factor is the ratio of output of the drill to the figures on the Grain and Fertilizer Chart (33759, page 14). The Standard drive factor as supplied from the factory is 1.0, i.e. the output of the drill will be approximately 1.0 times (i.e. the same as) the figure on the Grain & Fertilizer chart for the selected gear setting.

If a lower than standard seeding rate is required, this drive factor chart will show you how to apply change gears and sprockets.

To achieve a drive factor of 0.43 for both the front and rear compartments of the Grain & Fertilizer box, the 15/23 tooth sprocket must be reversed as shown below. To change the sprocket, first remove the chains at the joiner links and remove the circlip and washer holding the sprocket on the shaft. Slide the sprocket off the shaft and turn it over before re-installing the washer and circlip. The length of the chains will need to be adjusted to suit before they are reinstalled. ie. Remove the additional joiner and four links from the longer chain and add them to the “shorter” chain – re-fit the chains and adjust tensioners.

If a 0.43 drive factor is required on the front compartment and 1.0 on the rear, or vice versa, the two 25 tooth gears will need to be replaced with optional 15 tooth (P/N: 18490) and 35 tooth (P/N: 18491) gears as shown in the chart below. Please note that these gears are not supplied as standard with the machine.

If a faster rate is required, the 34 tooth sprockets on the distributor shafts at the end of the grain & fertilizer box can be replaced with optional 15 tooth sprockets (P/N: 18802, not supplied as standard). This will give a drive factor of 2.3.

DRIVE FACTOR CHART					
DRIVE FACTOR ►		1.0 Front 1.0 Rear	0.43 Front 0.43 Rear	1.0 Front 0.43 Rear	0.43 Front 1.0 Rear
DRIVEN	CHANGE	25 Teeth	25 Teeth	15 Teeth *	35 Teeth *
DRIVE	GEARS	25 Teeth	25 Teeth	35 Teeth *	15 Teeth *
DRIVEN	CHANGE	23 Teeth	15 Teeth	15 Teeth	23 Teeth
DRIVE	SPROCKETS	15 Teeth	23 Teeth	23 Teeth	15 Teeth

* OPTIONAL EXTRA

Shearer Grass Seed Box CHART P/No. 24519

March 1982

Quantities stated are in KILOGRAMMES per HECTARE and are approximate only. Check in field when sowing commences. For seeds not listed select nearest equivalent in size and type.

OPENING NUMBERS	1/2	1	2	3	4	5	6	7	8
COCKSFOOT	.2	.4	.8	1.4	2.0	2.2	2.9	3.1	3.5
BARREL CLOVER	1.0	2.1	3.9	6.6	7.3	8.1	9.4	10.8	11.5
PERENNIAL RYE	.7	.8	1.8	2.1	2.8	3.4	3.9	4.3	4.6
PHALARIS TUBEROSA	.5	1.1	2.5	3.6	4.8	5.9	7.0	8.0	8.4
CANARY	.6	1.3	2.5	3.9	5.0	5.9	7.0	7.7	8.1
EVENING PRIMROSE	.6	1.3	2.4	3.6	4.6	5.8	6.9	7.6	8.3
SUBTERRANEAN CLOVER	1.0	2.1	3.8	5.5	7.0	8.3	9.7	10.8	11.2
LUCERNE	1.0	2.1	4.2	6.2	8.0	10.0	11.6	13.2	14.2
STRAWBERRY CLOVER	.7	1.4	2.4	3.5					
RAPE	1.1	2.2	4.4						
CHOU MOULLIER	.5	1.1	2.7						
TURNIP	.8	1.6	3.1						

CONVERSION:
1 kg/ha = 0.9 lbs/acre
1 lb/acre = 1.12 kg/ha

Machine delivers similar VOLUME of all materials.
Sowing rates for unlisted materials may be estimated as follows;

$$\text{Rate for material} = \text{rate for lucerne} \times \frac{\text{kg/L (for material)}}{.8 \text{ (kg/L for lucerne)}}$$

JANUARY 1988

GRAIN & FERTILIZER CHART Sowing at 180mm spacing. P/No. 33759

QUANTITIES SHOWN ARE IN KG/HA AND ARE APPROXIMATE ONLY.
CHECK IN FIELD WHEN SOWING COMMENCES

GEARBOX SETTING		F6	F5	F4	E6	E5	F3	D6	E4	D5	F2	C6	E3	D4	C5	B6	A6	A5	B4	C3	D2	A4	E1	B3	C2	A3	D1	B2	A2	C1	B1	A1	GATE SET.
GRAN. SUPER PHOS.	NO	52	60	71	73	84	87	93	99	107	111	113	120	126	131	134	154	177	181	188	197	209	214	221	240	255	274	283	326	333	393	453	2
HIGH ANAL. FERT.	NO	36	42	49	51	58	60	65	69	74	77	79	83	88	91	93	107	123	126	131	137	145	149	154	167	177	190	197	227	231	273	315	2
UREA	NO	20	23	28	28	32	34	36	38	42	43	44	47	49	51	52	60	69	70	73	77	81	83	86	93	99	106	110	127	130	153	176	1
WHEAT & PEAS	COARSE	7	8	10	10	11	12	13	13	14	15	15	16	17	18	18	21	24	25	25	27	28	29	30	33	34	37	38	44	45	53	61	W,2.P,3.
	NO	30	35	41	42	49	50	54	57	62	64	66	70	74	76	78	90	103	106	109	115	122	125	129	140	148	159	165	190	194	229	264	
OATS & RICE	COARSE	4	5	6	6	7	7	8	8	9	9	10	10	11	11	11	13	15	16	16	17	18	18	19	21	22	23	24	28	28	33	39	2
	NO	17	19	23	24	27	28	30	32	35	36	37	39	41	42	43	50	57	59	61	64	68	69	72	78	82	89	92	106	108	127	147	
BARLEY	COARSE	5	6	7	7	8	8	9	10	10	10	11	11	12	12	13	15	17	17	18	19	20	20	21	23	24	26	27	31	32	38	43	2
	NO	20	23	28	29	33	34	36	39	42	43	44	47	49	51	52	60	69	71	74	77	82	84	87	94	100	107	111	128	130	154	177	
LUPIN & SOYBEAN	NO	40	47	55	57	65	68	72	77	83	86	88	93	98	102	104	120	137	141	146	153	162	166	172	186	198	213	220	253	259	305	352	3
SORGHUM	FINE	4	5	6	6	7	7	7	8	8	8	9	9	10	10	10	12	14	14	15	15	16	17	17	19	20	21	22	25	26	31	35	1
MILLET & CANARY	FINE	3	3	4	4	4	5	5	5	6	6	6	6	7	7	7	8	9	9	10	10	11	11	11	12	13	14	15	17	17	20	23	1
SUNFLOWER	NO	7	9	10	10	12	12	13	14	15	16	16	17	18	19	19	22	25	26	27	28	30	30	31	34	36	39	40	46	47	56	65	2
LINSEED	NO	14	16	19	20	23	24	25	27	29	30	31	33	34	36	36	42	48	49	51	54	57	58	60	65	69	74	77	89	91	107	123	1
LUCERNE	FINE	4	4	5	5	6	6	6	7	7	8	8	9	9	10	10	11	11	12	13	14	15	16	17	18	19	20	21	22	23	27	30	1
RYE GRASS	FINE	2	2	3	3	3	3	3	4	4	4	4	4	4	5	5	5	5	5	6	6	6	7	7	7	8	8	9	9	10	11	13	1

NO RESTRICTOR RESTRICTOR RESTRICTOR

FLUTED ROLLER DISTRIBUTOR

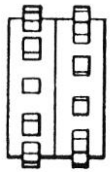

PEG TOOTH ROLLER DISTRIBUTOR

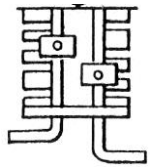

When lower sowing rates are required use restrictor.
Factors are:- COARSE = UNRESTRICTED x .25
FINE = UNRESTRICTED x .2
Grain or fertilizer can be sown from either the front or rear compartment. If grain or fertilizer is sown from both compartments, the sum of feed rates selected from each compartment should equal total rate required.

This implement delivers similar VOLUME of all materials.
Sowing rates in kg/ha vary in proportion to density (kg/L) of materials.
Sowing rates for unlisted materials may be estimated as follows:-

$$\text{rate for wheat} \times \frac{\text{kg/L (for material)}}{\text{.8 (kg/L for wheat)}}$$

Note: The following chart is suitable for use on standard width machines. It does not apply when extensions are fitted

JANUARY 1988

GRAIN & FERTILIZER CHART Sowing at 230-260mm spacing. P/No. 33760

QUANTITIES SHOWN ARE IN KG/HA AND ARE APPROXIMATE ONLY.
CHECK IN FIELD WHEN SOWING COMMENCES

GEARBOX SETTING		F6	F5	F4	E6	E5	F3	D6	E4	D5	F2	C6	E3	D4	C5	B6	A6	A5	B4	C3	D2	A4	E1	B3	C2	A3	D1	B2	A2	C1	B1	A1	GATE SET.
GRAN. SUPER PHOS.	NO	36	42	50	51	59	61	65	69	75	78	79	84	88	92	94	108	124	127	132	138	146	150	155	168	179	192	198	228	233	275	317	2
HIGH ANAL. FERT.	NO	25	29	34	36	41	42	46	48	52	54	55	58	62	64	65	75	86	88	92	96	102	104	108	117	124	133	138	159	162	191	221	2
UREA	NO	14	16	20	20	22	24	25	27	29	30	31	33	34	36	36	42	48	49	51	54	57	58	60	65	69	74	77	89	91	107	123	1
WHEAT & PEAS	COARSE	5	6	7	7	8	8	9	9	10	11	11	11	12	13	13	15	17	18	18	19	20	20	21	23	24	26	27	31	32	37	43	W,2.P,3.
	NO	21	25	29	29	34	35	38	40	43	45	46	49	52	53	55	63	72	74	76	81	85	88	90	98	104	111	116	133	136	160	185	
OATS & RICE	COARSE	3	4	4	4	5	5	6	6	6	6	7	7	8	8	8	9	11	11	11	12	13	13	13	15	15	16	17	20	20	23	27	2
	NO	12	13	16	17	19	20	21	22	25	25	26	27	29	29	30	35	40	41	43	45	48	48	50	55	57	62	64	74	76	89	103	
BARLEY	COARSE	4	4	5	5	6	6	6	7	7	7	8	8	8	8	9	11	12	12	13	13	14	14	15	16	17	18	19	22	22	27	30	2
	NO	14	16	20	20	23	24	25	27	29	30	31	33	34	36	36	42	48	50	52	54	57	59	61	66	70	75	78	90	91	108	124	
LUPIN & SOYBEAN	NO	28	33	39	40	46	48	50	54	58	60	62	65	69	71	73	84	96	99	102	107	113	116	120	130	139	149	154	177	181	214	246	3
SORGHUM	FINE	3	4	4	4	5	5	5	6	6	6	6	6	7	7	7	8	10	10	11	11	11	12	12	13	14	15	15	18	18	22	25	1
MILLET & CANARY	FINE	2	2	3	3	3	4	4	4	4	4	4	4	5	5	5	6	6	6	7	7	8	8	8	8	9	10	11	12	12	14	16	1
SUNFLOWER	NO	6	6	7	7	8	8	9	10	11	11	11	12	13	13	13	15	18	18	19	20	21	21	22	24	25	27	28	32	33	39	46	2
LINSEED	NO	10	11	13	14	16	17	18	19	20	21	22	23	24	25	25	29	34	34	36	38	40	41	42	46	48	52	54	62	64	75	86	1
LUCERNE	FINE	3	3	3	4	4	4	5	5	5	6	6	6	7	7	7	8	8	9	9	10	11	12	12	13	14	15	16	17	18	20	22	1
RYE GRASS	FINE	2	2	2	2	2	3	3	3	3	3	3	3	3	4	4	4	4	4	4	4	5	5	5	6	6	6	7	7	8	8	10	1

NO RESTRICTOR RESTRICTOR RESTRICTOR

FLUTED ROLLER DISTRIBUTOR

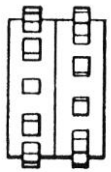

PEG TOOTH ROLLER DISTRIBUTOR

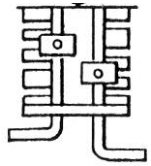

When lower sowing rates are required use restrictor.
Factors are:- COARSE = UNRESTRICTED x .25
FINE = UNRESTRICTED x .2
Grain or fertilizer can be sown from either the front or rear compartment. If grain or fertilizer is sown from both compartments, the sum of feed rates selected from each compartment should equal total rate required.

This implement delivers similar VOLUME of all materials.
Sowing rates in kg/ha vary in proportion to density (kg/L) of materials.
Sowing rates for unlisted materials may be estimated as follows:-

$$\text{rate for wheat} \times \frac{\text{kg/L (for material)}}{\text{.8 (kg/L for wheat)}}$$

MAIN FRAME, HITCH, JACK, SCREW ASSEMBLY.

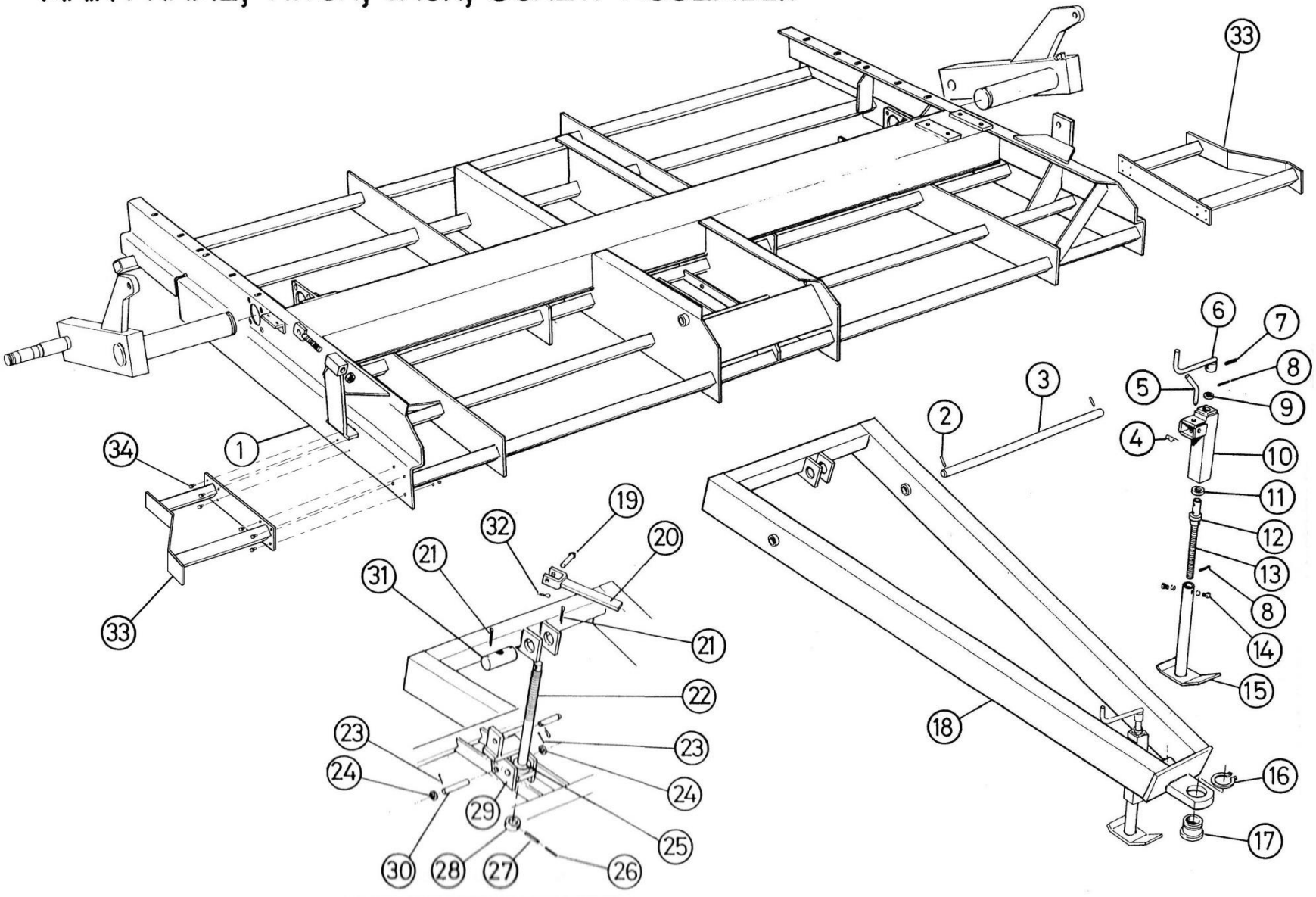

MAIN FRAME, HITCH, JACK AND SCREW ASSEMBLY

ITEM	PART No	DESCRIPTION		ITEM	PART No	DESCRIPTION	
1	22510	FRAME ASSY.	Main, 21 row	29	29023	BRACKET ASSY.	Levelling
	22511	FRAME ASSY.	Main, 27 row	30	21639	PIN	Pivot levelling bracket
	28921	FRAME ASSY.	Main, 33 row	31	15771J1	BLOCK	Pivot level lift
	39871	FRAME ASSY.	Main, 20 row		36236	BLOCK	Pivot level lift (FROM 1995)
	39872	FRAME ASSY.	Main, 24 row	32	H135-57	HAIR-PIN	∅2.8 (11 gauge)
	39873	FRAME ASSY.	Main, 28 row				
	70062	FRAME ASSY.	Main, 24 row - 4 Bin				
	70052	FRAME ASSY.	Main, 27 row - 4 Bin		42462	EXTENSION FRAME KIT	(Optional)
2	SKP177	PIN	Sellock ∅3/8”x1-3/4”	33	42393	EXTENSION ASSY	
3	18311	SHAFT	Hitch to frame	34	20799	SETSCREW	Hex M12 x 35
4	H160-106	HAIR-PIN	∅4 (8 gauge)		18414	NUT	Hex M12
5	18804	PIN	Stand locking		17616J1	WASHER	Spring ∅12
6	17951J91	HANDLE ASSY.	Jack				
7	SKP160	PIN	Sellock ∅5/16” x 1-1/2”				
8	SKP99	PIN	Sellock ∅3/16” x 1-1/4”				
9	18312	WASHER	Flat black ∅20			**ASSEMBLIES**	
10	17954J91	SHROUD ASSY.			17950J91	SCREW JACK ASSY.	Items 6-15
11	17964J1	BEARING	Thrust				
12	17963J1	NUT	Jack		36556	SCREW JACK ASSY.	(FROM 1995)
13	17960J91	SCREW ASSY.	Jack				(NOT ILLUSTRATED)
14	17966J1	SET SCREW	Hex M6 x 12				
	STW2	WASHER	Star ∅1/4”				
15	17958J91	STAND ASSY.	Jack				
16	21657	CIRCLIP	External ∅82				
17	21656	BUSH	Tongue 1-1/2” hitch pin				
	24373	BUSH	Tongue 1” hitch pin (optional extra)				
18	21650	HITCH ASSY.					
19	TP48A	PIN	Drilled 2” x 3/8”				
20	17497J91	HANDLE ASSY.	Adjusting screw				
21	16944J1	PIN	Cotter ∅6.3 x 63				
22	21571	SCREW ASSY.	Levelling				
	36232	SCREW ASSY.	Levelling (FROM 1995)				
23	16942J1	PIN	Cotter ∅5 x 40				
24	18534	WASHER	Clutch				
25	15325J1	BEARING	Thrust				
26	SKP123	PIN	Sellock ∅7/32” x 2-1/4”				
27	SKP179	PIN	Sellock ∅3/8” x 2-1/4”				
28	15770J1	COLLAR	Screw retaining				

AXLE ARM ASSEMBLIES

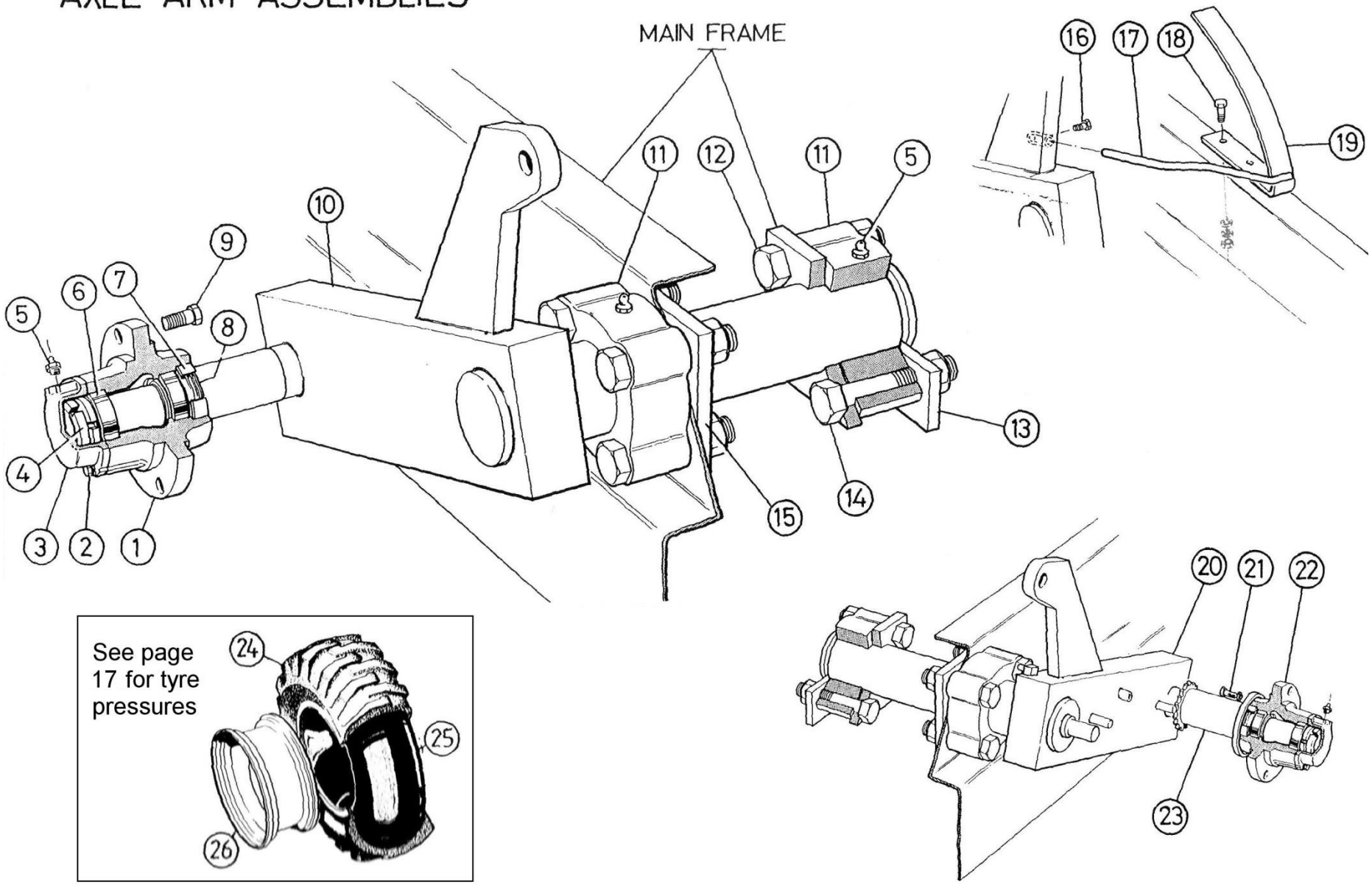

See page 17 for tyre pressures

AXLE ARM ASSEMBLIES

ITEM	PART No	DESCRIPTION	
1	18325	HUB	R/H
	34964	HUB	R/H (24R 4 bin)
	42807	HUB	R/H (33 row)
	42806	HUB	R/H (27R 4 bin)
2	SD2097	SET SCREW	Hex 7/8” x 5/16” UNC h.t.
	STW3	WASHER	Star ∅5/16”
3	15305J1	CAP	Hub
	30195	GASKET	Dust cap
4	15205J1	NUT	50mm
5	18596	NIPPLE	Grease - self tapped
6	15203J1	BEARING	50mm Cup & Cone
	15306J1	BEARING	Inner, (33 row, 24 & 27R 4 bin)
7	12396	WEAR-RING	
	TC462	WEAR-RING	(33 row, 24 & 27R 4 bin)
8	12395	SEAL	Triple lipped
	TC461	SEAL	(33 row, 24 & 27R 4 bin)
9	16199J1	BOLT & NUT	2-1/4” x 5/8” UNF h.t.
	17606J1	WASHER	Spring ∅16
	42802	BOLT & NUT	2-1/2” x 3/4” UNF
	18023	WASHER	Spring ∅20
10	22278	AXLE ARM ASSY.	R/H
	34966	AXLE ARM ASSY.	R/H (33 row)
	37744	AXLE ARM ASSY.	R/H (24R 4 bin)
	37592	AXLE ARM ASSY.	R/H (27R 4 bin)
11	22272	BLOCK	Bearing
12	21468	BOLT	Hex M24 x 110 Gr. 8.8
	18935	WASHER	Spring ∅24
	18042	NUT	Hex M24
13	22270	PLATE	
14	18041	BOLT	Hex M24 x 130 Gr. 8.8
	18935	WASHER	Spring ∅24
	20518	WASHER	Flat 24mm I.D. x 1.6mm
	18042	NUT	Hex M24
15	22286	PACKER	
16	20522	SET SCREW	Hex M8 x 12
17	22301	POINTER	Depth indicator (TCD – low box only)
	34507	POINTER	Depth indicator (2 bin raised box)
	37951	POINTER	Depth Indicator (24 & 27R 4 Bin)
18	18824	BOLT	Hex M10 x 30 Gr. 5
	FBW4	WASHER	Flat ∅3/8”

ITEM	PART No	DESCRIPTION	
	17776J1	WASHER	Spring ∅10
	17777J1	NUT	Hex M10
19	21847	QUADRANT	Depth indicator
	37647	QUADRANT	Depth indicator (24 & 27R 4 bin)
20	22277	AXLE ARM ASSY.	L/H
		AXLE ARM ASSY.	L/H (24 4 bin)
	34962	AXLE ARM ASSY.	L/H (33R 2 bin, 24 & 27R 4 bin)
21	17602J1	BOLT	Hex M10 x 25 Gr. 4.6
	17776J1	WASHER	Spring ∅10
22	18331	HUB	L/H
	34964	HUB	L/H (24R 4 bin)
	42806	HUB	L/H (33R & 27R/4)
23	21710	EXTENSION ASSY.	Hub L/H
	34963	EXTENSION ASSY.	Hub L/H (33R 2 bin, 24 & 27R 4 bin)
24	21658	TYRE	16.9 x 28 x 6 ply (20R, 21R & 24R)
	30138	TYRE	18.4 x 30 x 8 ply (24R 4bin, 27R, 28R)
	34986	TYRE	23.1 x 30 x 8 ply (27R 4 bin & 33R)
25	21659	TUBE	16.9 x 28 (20R, 21R & 24R)
	30139	TUBE	18.4 x 30 (24R 4 bin, 27R, 28R)
	34985	TUBE	23.1 x 30 (27R 4 bin & 33R)
26	21697	RIM ASSY.	W15L x 28” (20R, 21R & 24R 2 bin)
	30140	RIM ASSY.	DW16 x 30” (27 & 28R 2 bin, 24R 4 bin)
	42804	RIM ASSY.	DW20 x 30” (27R 4 bin & 33R)
	22275	AXLE ARM & HUB ASSY L/H - Items 2-8, 20-23	
	42822	AXLE ARM & HUB ASSY L/H (24R 4 bin) - Items 2-8, 20-23	
	34960	AXLE ARM & HUB ASSY L/H (33 row & 27R 4 bin) - Items 2-8, 20-23	
	22276	AXLE ARM & HUB ASSY R/H - Items 1-8, 10	
	34961	AXLE ARM & HUB ASSY R/H (33 row) - Items 1-8, 10	
	37593	AXLE ARM & HUB ASSY R/H (27R 4 bin) Items 1-8, 10, 21, 23	
	37779	AXLE ARM & HUB ASSY R/H (24R 4 bin) Items 1-8, 10, 21, 23	
	34002	WHEEL ASSY.	16.9 x 28 (20R, 21R & 24R)
	34005	WHEEL ASSY.	18.4 x 30 (24R 4 bin, 27R, 28R)
	34987	WHEEL ASSY.	23.1 x 30 (33 row & 27 row 4 bin)

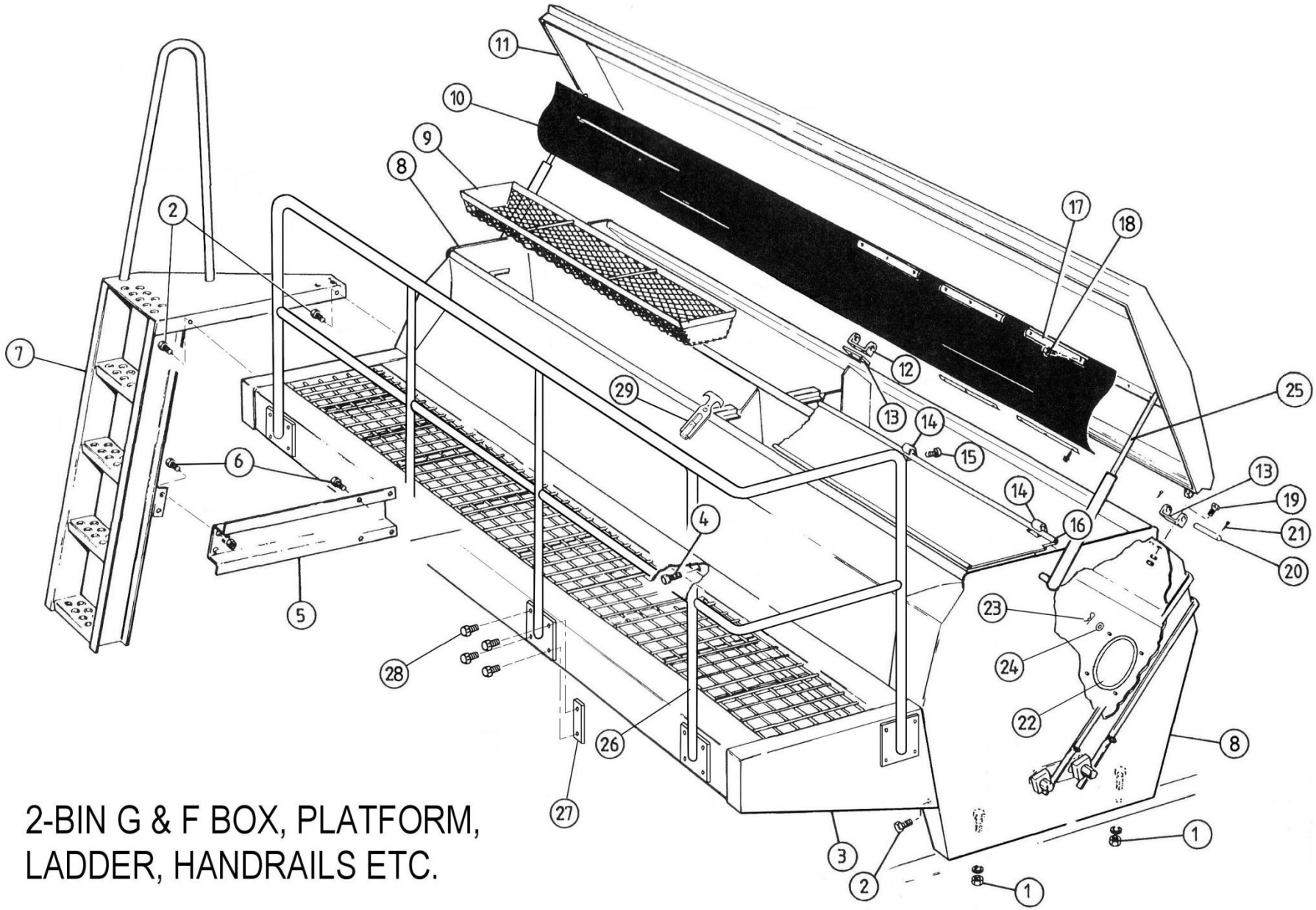

2-BIN G & F BOX, PLATFORM, LADDER, HANDRAILS ETC.

GRAIN AND FERTILISER BOX, PLATFORM, LADDER ETC. – 2 BIN

ITEM	PART No	DESCRIPTION		ITEM	PART No	DESCRIPTION	
1	18414	NUT	Hex M12		37499	FLAP	Dust 20 row
	17616J1	WASHER	Spring ∅12		37500	FLAP	Dust 24 row
	18805	BOLT	Hex M12 x 30		37501	FLAP	Dust 28 row
2	18805	SET SCREW	Hex M12 x 30 Gr 8.8	11	30925	LID ASSY.	Welded 21 row
	17616J1	WASHER	Spring ∅12		30926	LID ASSY.	Welded 27 row
	FBW6	WASHER	Flat ∅12		33492	LID ASSY.	Welded 33 row
	18414	NUT	Hex M12		37419	LID ASSY.	Welded 20 row
3	30945	PLATFORM ASSY.	21 row		37432	LID ASSY.	Welded 24 row
	30946	PLATFORM ASSY.	27 row		37476	LID ASSY.	Welded 28 row
	33501	PLATFORM ASSY.	33 row	12	30985	HINGE ASSY	lid
	37441	PLATFORM ASSY.	20 row	13	30988	PACKER	Centre – hinge
	37448	PLATFORM ASSY.	24 row	14	30958	BRACKET	Cover
	37454	PLATFORM ASSY.	28 row	15	18502	SET SCREW	Hex M8 x 16
4	18805	SET SCREW	Hex M12 x 30 Gr 8.8	16	30991	COVER	Inside 21 row
	17616J1	WASHER	Spring ∅12		30992	COVER	Inside 27 row
	FBW6	WASHER	Flat ∅12		33500	COVER	33 row
	18414	NUT	Hex M12		37426	COVER	Inside 20 row
5	26905	MEMBER SUPPORT	Ladder (TCD)		37433	COVER	Inside 24 row
	35005	MEMBER SUPPORT	Ladder (2 BIN DIRECT DRILL)		37483	COVER	Inside 28 row
6	18613	SET SCREW	Hex M10 x 20	17	30748	STRIP	Retainer
	17776J1	WASHER	Spring ∅10	18	30747	BOLT	Self drilling #10 x 16
	17777J1	NUT	Hex M10	19	19151	BOLT	Hex M8 x 25
7	26899	LADDER ASSY	Platform (TCD)		18465	WASHER	Spring ∅8
	36365	LADDER ASSY	Platform (DIRECT DRILL)		18464	NUT	Hex M8
8	30902	BOX ASSY.	Welded 21 row	20	30986	PIN	Hinge
	30903	BOX ASSY.	Welded 27 row	21	16945J1	PIN	Cotter ∅3.2 x 20
	33481	BOX ASSY.	Welded 33 row	22	36940	PANEL	Viewing
	37425	BOX ASSY.	Welded 20 row	23	H135-57	HAIRPIN	2.8mm
	37431	BOX ASSY.	Welded 24 row	24	FBW6	WASHER	Flat ∅12
	37482	BOX ASSY.	Welded 28 row	25	36964	STRUT	Gas – 350N
9	30993	SCREEN ASSY.	21 row	26	42550	HANDRAIL ASSY.	21row
	30994	SCREEN ASSY.	27 row		42552	HANDRAIL ASSY.	27 row
	33946	SCREEN ASSY.	33 row		42553	HANDRAIL ASSY.	33 row
	37427	SCREEN ASSY.	20 row		42550	HANDRAIL ASSY.	20 row
	37434	SCREEN ASSY.	24 row		42551	HANDRAIL ASSY.	24 row
	37484	SCREEN ASSY.	28 row		42552	HANDRAIL ASSY.	28 row
10	30932	FLAP	Dust 21 row	27	37952	PLATE	Strengthener - Handrail
	30933	FLAP	Dust 27 row	28	20799	SET SCREW	Hex M12x35
	33495	FLAP	Dust 33 row		18414	NUT	Hex M12

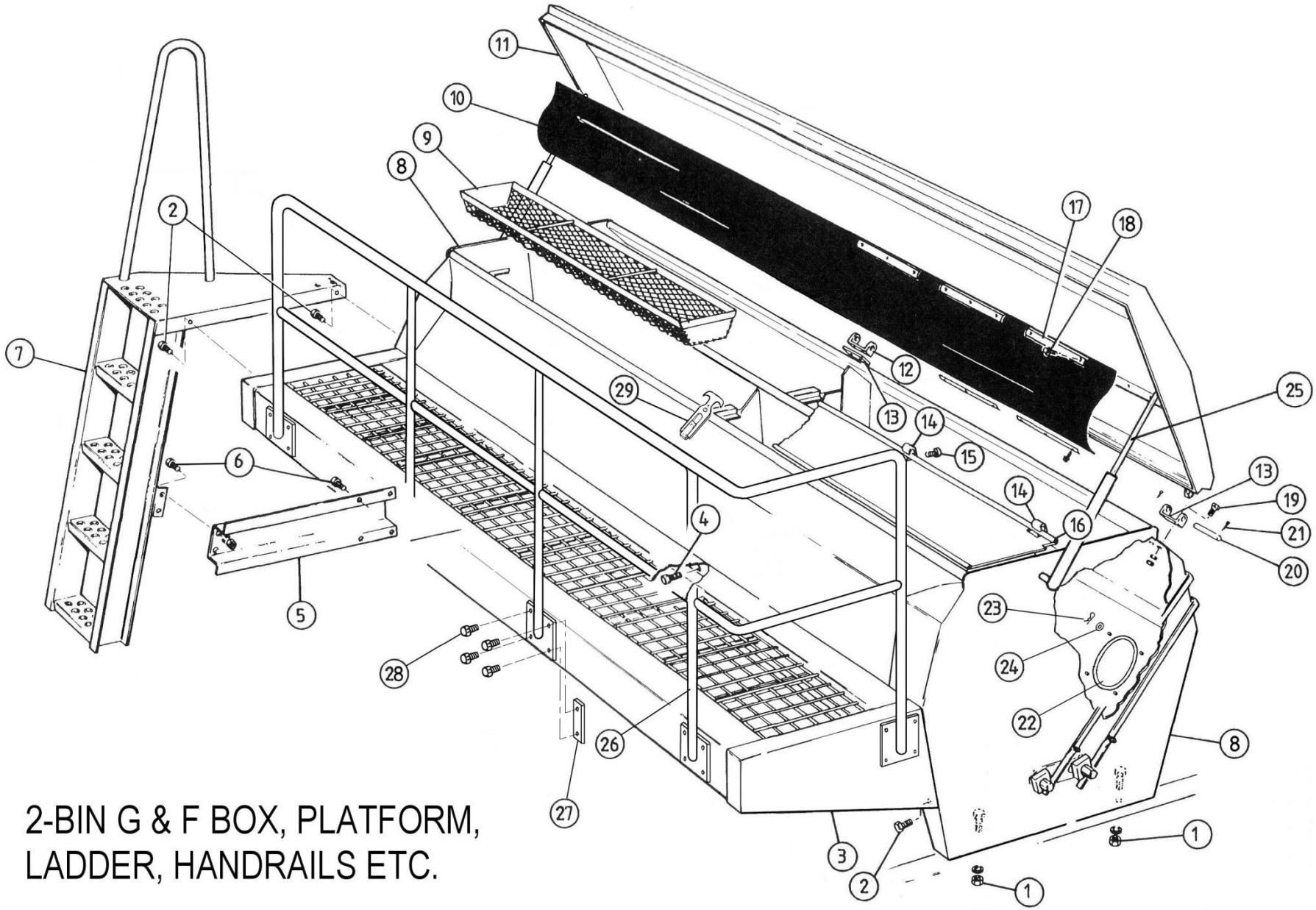

2-BIN G & F BOX, PLATFORM, LADDER, HANDRAILS ETC.

GRAIN AND FERTILISER BOX, PLATFORM, LADDER ETC. CONT'D – 2 BIN

ITEM	PART No	DESCRIPTION		ITEM	PART No	DESCRIPTION	
	17616J1	WASHER	Spring ∅12				
29	37590	LATCH	Draw			**ASSEMBLIES**	
	37549	SPACER	Latch				
	37591	SCREW	C'Sunk thread M5 x 50mm		30900	GRAIN & FERTILIZER BOX COMPLETE	21 row
	33575	WASHER	Spring 5mm 3/32" x 1/16"		30901	GRAIN & FERTILIZER BOX COMPLETE	27 row
	37999	NUT	Hex - M5 plated		33480	GRAIN & FERTILIZER BOX COMPLETE	33 row
	39625	SCREW	C'Sunk thread M5 x 20mm		37420	GRAIN & FERTILIZER BOX COMPLETE	20 row
					37430	GRAIN & FERTILIZER BOX COMPLETE	24 row
					37480	GRAIN & FERTILIZER BOX COMPLETE	28 row
						2 BIN DIRECT DRILL MODEL (24-33R)	
					42487	KIT – RAISED GRAIN & FERTILIZER BOX	
						INCLUDES THE FOLLOWING MAJOR ITEMS	
					42472	PEDESTAL	2 bin L.H.
					42473	PEDESTAL	2 bin R.H.
					42477	CHAIN GUARD	Clutch to G'Box
					42476	GUARD ASSY	Chain Drive
					36369	KIT	Chains & Tensioners
					42475	STRAP	Raised Box
					42474	SUPPORT	Centre (24 - 33 row)
						2 BIN DIRECT DRILL MODEL (20 & 21R)	
					42486	KIT – RAISED GRAIN & FERTILIZER BOX	
						INCLUDES THE FOLLOWING MAJOR ITEMS	
					42472	PEDESTAL	2 bin L.H.
					42473	PEDESTAL	2 bin R.H.
					42477	CHAIN GUARD	Clutch to G'Box
					42476	GUARD ASSY	Chain Drive
					36369	KIT	Chains & Tensioners
					42475	STRAP	Raised Box
						Note: The raised box kits (above) are optional on TCD's	

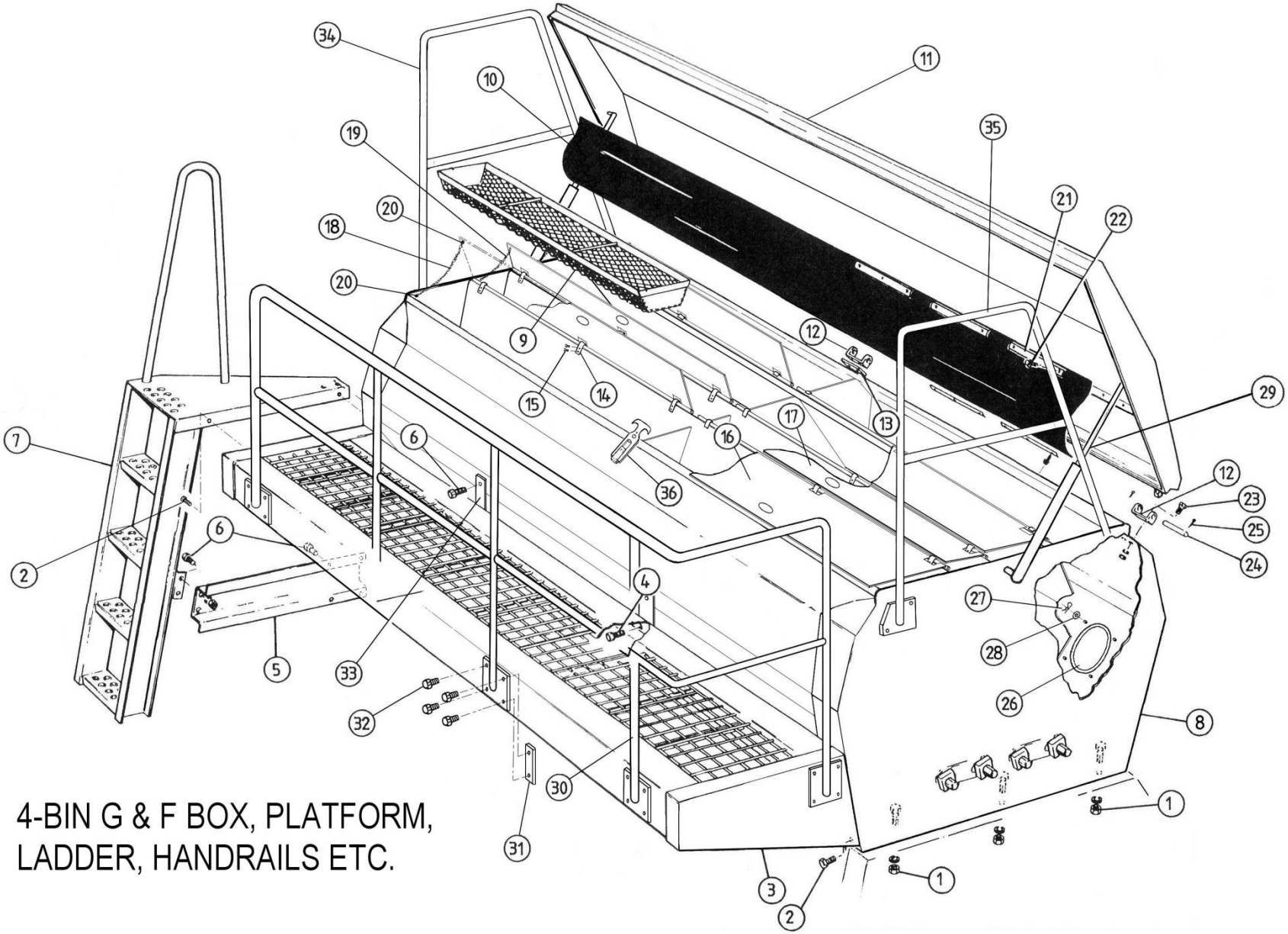

4-BIN G & F BOX, PLATFORM, LADDER, HANDRAILS ETC.

GRAIN AND FERTILISER BOX, PLATFORM, LADDER ETC. – 4 BIN

ITEM	PART No	DESCRIPTION	
1	18414	NUT	Hex M12
	17616J1	WASHER	Spring ∅12
	18805	BOLT	Hex M12 x 30
2	18805	SET SCREW	Hex M12 x 30 Gr 8.8
	17616J1	WASHER	Spring ∅12
	FBW6	WASHER	Flat ∅12
	18414	NUT	Hex M12
3	30946	PLATFORM ASSY.	27 row
	37448	PLATFORM ASSY.	24 row
4	20679	SET SCREW	Hex M10 x 35
	FBW4	WASHER	Spring ∅10
	17777J1	NUT	Hex M10
5	37462	MEMBER SUPPORT	Ladder (4 BIN DIRECT DRILL)
6	18805	SET SCREW	Hex M12 x 30 Gr 8.8
	17616J1	WASHER	Spring ∅12
	FBW6	WASHER	Flat ∅12
	18414	NUT	Hex M12
7	37719	LADDER ASSY	Platform (4 BIN DIRECT DRILL)
8	37618	BOX ASSY.	Welded 27 row 4 bin
	37736	BOX ASSY.	Welded 24 row 4 bin
9	30994	SCREEN ASSY.	27 row
	37434	SCREEN ASSY.	24 row
10	30933	FLAP	Dust 27 row
	37500	FLAP	Dust 24 row
11	37601	LID ASSY.	Welded 27 row 4 bin
	37739	LID ASSY.	Welded 24 row 4 bin
12	30985	HINGE ASSY	Lid
13	30988	PACKER	Centre – hinge
14	30958	BRACKET	Cover
15	18502	SET SCREW	Hex M8 x 16
16	37608	COVER ASSY.	Inside large 27 row 4 bin
	37776	COVER ASSY.	Inside large 24 row 4 bin
17	37609	COVER ASSY.	Inside small 27 row 4 bin
	37777	COVER ASSY.	Inside small 24 row 4 bin
18	42510	CHAIN	Support - Long (19 links)
19	42511	CHAIN	Support - Short (13 links)
20	17495J1	BOLT	Hex M8 x 30
	FBW3	WASHER	Flat ∅8
	18465	WASHER	Spring ∅8
	18464	NUT	Hex M8
21	30748	STRIP	Retainer
22	30747	BOLT	Self drilling #10 x 16

ITEM	PART No	DESCRIPTION	
23	19151	BOLT	Hex M8 x 25
	18465	WASHER	Spring ∅8
	18464	NUT	Hex M8
24	30986	PIN	Hinge
25	16945J1	PIN	Cotter ∅3.2 x 20
26	36940	PANEL	Viewing
27	H135-57	HAIRPIN	2.8mm
28	FBW6	WASHER	Flat ∅12
29	37704	STRUT	Gas – 400N (4 Bin)
30	42552	HANDRAIL ASSY.	27 row
	42551	HANDRAIL ASSY.	24 row
31	37952	PLATE	Strengthener - Handrail
32	20799	SET SCREW	Hex M12x35
	18414	NUT	Hex M12
	17616J1	WASHER	Spring ∅12
33	37706	HANGER	Platform
34	37667	HANDRAIL ASSY.	Box end L/H
35	37668	HANDRAIL ASSY.	Box end R/H
36	37590	LATCH	Draw
	37549	SPACER	Latch
	37591	SCREW	C'Sunk thread M5 x 50mm
	33575	WASHER	Spring 5mm 3/32" x 1/16"
	37999	NUT	Hex - M5 plated
	39625	SCREW	C'Sunk thread M5 x 20mm
		ASSEMBLIES	
	37712	GRAIN & FERTILIZER BOX COMPLETE	27 row 4 bin
	37781	GRAIN & FERTILIZER BOX COMPLETE	24 row 4 bin
		<u>4 BIN DIRECT DRILL MODEL</u>	
		RAISED G & F BOX IS STANDARD AND INCLUDES	
		THE FOLLOWING MAJOR ITEMS	
	37642	PEDESTAL	4 bin L.H.
	37643	PEDESTAL	4 bin R.H.
	37688	CHAIN GUARD ASSY.	Clutch to G'Box L/H – 4 bin
	37689	CHAIN GUARD ASSY.	Clutch to G'Box R/H – 4 bin
	37761	CHAIN GUARD ASSY.	Drive L/H
	37762	CHAIN GUARD ASSY.	Drive L/H
	37949	CHAIN GUARD ASSY.	Primary Drive L/H
	37950	CHAIN GUARD ASSY.	Primary Drive L/H
	37662	KIT - SUPPORT TCD BOX	27 row 4 bin
	37953	KIT - SUPPORT TCD BOX	24 row 4 bin

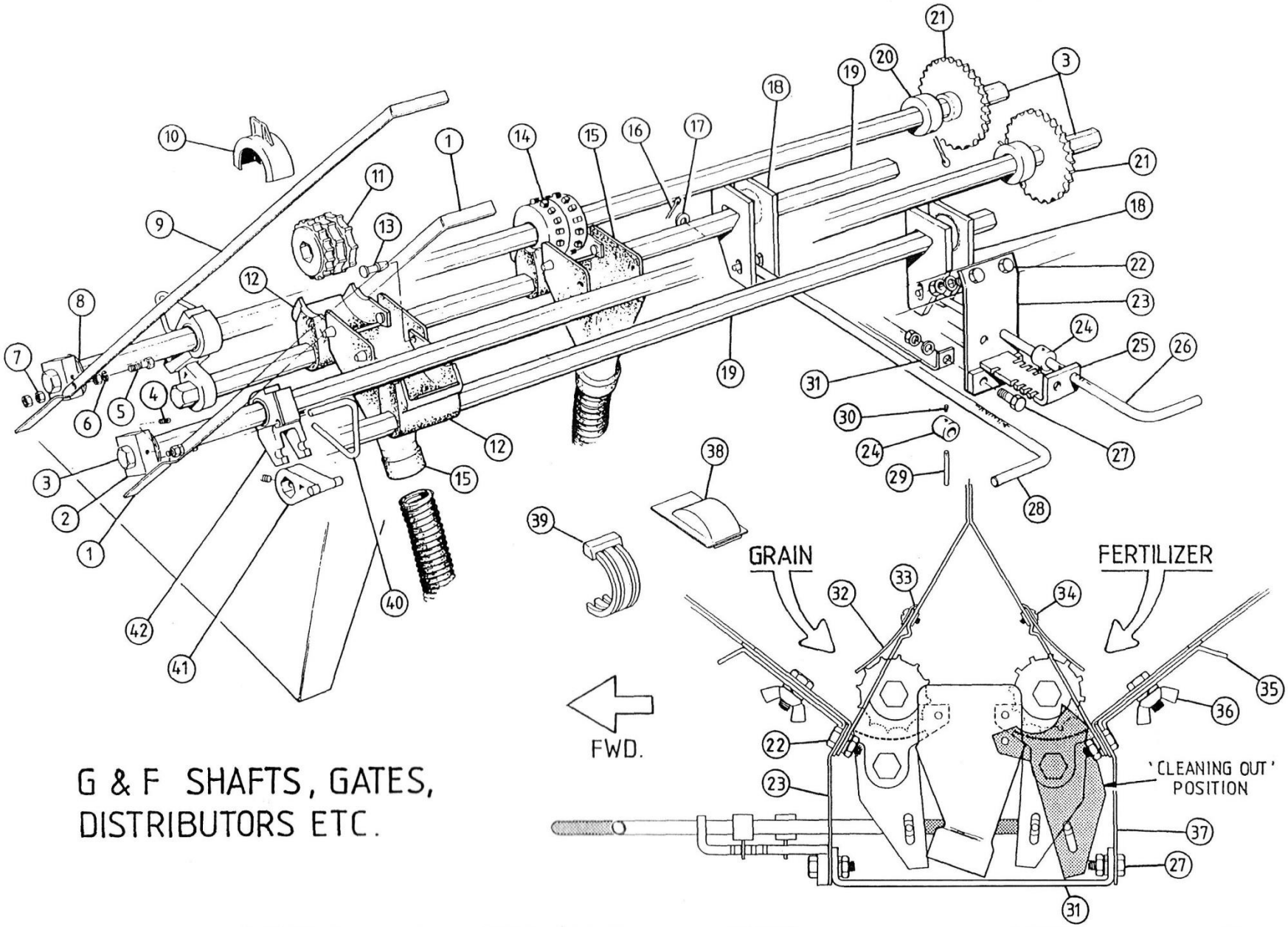

G & F SHAFTS, GATES, DISTRIBUTORS ETC.

GRAIN & FERTILIZER SHAFTS, GATES, DISTRIBUTORS ETC.

ITEM	PART No	DESCRIPTION		ITEM	PART No	DESCRIPTION	
1	30940	INDICATOR	Short G & F box (up to April 2014)	25	18598	BRACKET ASSY.	Gate lever
2	18649	BLOCK	Indicator	26	20503	LEVER	Front
3	21753	SHAFT	Distributor 3705 21 row	27	19151	SET SCREW	Hex M8 x 25
	21754	SHAFT	Distributor 4725 27 row		18465	WASHER	Spring ∅8
	28929	SHAFT	Distributor 5805 33 row		18464	NUT	Hex M8
	18444	SHAFT	Distributor 3535 20 row	28	20502	LEVER	Rear
	18443	SHAFT	Distributor 4215 24 row	29	18515	PIN	Sellock ∅3 x 20
	18445	SHAFT	Distributor 4895 28 row	30	18789	SET SCREW	Soc. hd. M6 x 8
4	18663	SCREW	Soc. hd. M10 x 10	31	18657	BRACE	Support
5	31242	SETSCREW	Hex M6 x 30	32	21755	FLAP	Box bottom 21 row
6	FBW2	WASHER	∅¼” service		21756	FLAP	Box bottom 27 row
7	18656	NUT	Hex M6		28930	FLAP	Box bottom 33 row
8	FBW11	WASHER	1” service		18606	FLAP	Box bottom 20 row
9	30944	INDICATOR	Long G & F box (up to April 2014)		18607	FLAP	Box bottom 24 row
10	27897	RESTRICTOR	Wheel distributor		18608	FLAP	Box bottom 28 row
11	27896	WHEEL	Distributor fluted	33	21767	STRIP	Retainer (3 hole flap)
12	39994	GATE	Distributor	34	GB7G	BOLT/NUT	Gutter 5/8” x ¼”
13	18597	BUTTON	Cup	35	22654	COVER	Cleaning hole
14	18435	WHEEL	Distributor peg		22653	GASKET	Cover
15	39948	CUP	Hose (2 bin)	36	20801	NUT	Wing M10
	35997	CUP	Double hose (4 bin)		FBW4	WASHER	Flat ∅10
	417-144/P	CUP	Hose – Polyurethane (4 bin)	37	18808	BRACKET	Front G & F lever
16	20680	PIN	2.5 x 12 split cotter	38	18424	COVER	Cut-off distributor
17	18647	WASHER	∅6 bright	39	18746	INSERT	Distributor
18	20504	LINKAGE ASSY.	Gate shaft	40	20525	RETAINER	Bearing
	18893	SCREW	Soc. hd. M8 x 10 cone pt.	41	18849	HINGE	Gate
19	21752	SHAFT	Gate 1775 21 row, 33 row		18789	SCREW	Soc. hd. M6 x 8
	18419	SHAFT	Gate 1435 27row, 28row	42	18848	BEARING	Shaft distributor
	18420	SHAFT	Gate 1605 20 row, 21 row, 28 row		18422	BUSH	Shaft distributor
	18442	SHAFT	Gate 1265 24 row		18596	NIPPLE	Grease self tap
	22868	SHAFT	Gate 1797 33 row	43	37630	INDICATOR	Long L/H (4 bin)
20	18652	COLLAR	Stop shaft	44	37631	INDICATOR	Short L/H (4 bin)
	17589J1	PIN	Cotter ∅5 x 50	45	31187	ROLLER ASSY.	Broad bean (optional)
21	30039	SPROCKET ASSY.	34T			**ASSEMBLIES**	
	18892	SCREW	Soc. hd. M10 x 16 cone pt.		18847	BEARING DISTRIBUTOR ASSY. COMPLETE	
22	18502	SET SCREW	Hex M8 x 16 Gr. 8.8				Item 42 (18848, 18422 & 18596)
	18465	WASHER	Spring ∅8		23470	GUAGE	Gate 1.5mm peg tooth roller
	18464	NUT	Hex M8 Gr. 8.8		29939	GUAGE	Gate 3mm fluted roller
23	18599	BRACKET ASSY	Rear G & F lever		33657	GUAGE	Gate 4mm broad bean roller
24	18503	BUSH	Small adjusting		32198	KIT. FLUTED ROLLER & RESTRICTOR	Items 10 & 11

DRIVES, CLUTCH, GUARDS, ETC.

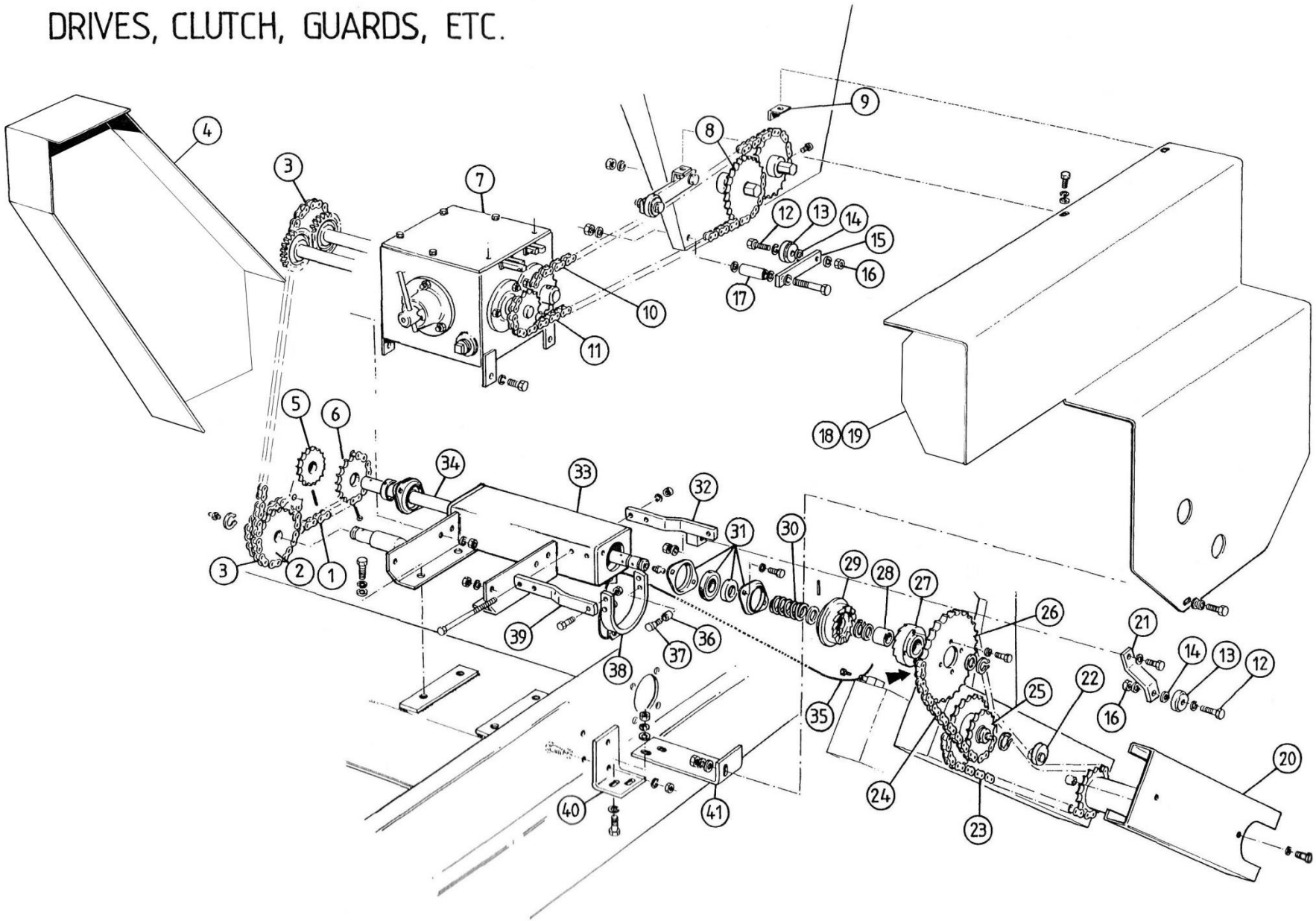

DRIVES, CLUTCH, GUARDS ETC.

ITEM	PART No	DESCRIPTION	
1	29362	CHAIN	39 links
	36371	CHAIN	81 links (Direct Drill Model)
	10615	LINK	connecting
2	37546	SPROCKET & BEARING ASSY.	15x23T
3	33632	CHAIN	31 links (Standard TCD)
	42849	CHAIN	87 links (2 bin DD, Raised TCD)
	37717	CHAIN	115 links (4 bin)
	10615	LINK	Connecting
	14214J1	LINK	Cranked
4	33761	GUARD ASSY.	Tertiary (Std. TCD)
	42477	GUARD ASSY.	Tertiary (2 bin DD, Raised TCD)
	37688	GUARD ASSY.	Tertiary L/H (4 bin)
5	36059	SPROCKET	GSB
6	18496	SPROCKET	19T x 5/8”p
7	33607	GEARBOX	Complete L/H
8	30039	SPROCKET ASSY.	34T G & F Box
	18892	SCREW	Socket hd. Cone pt. M10 x 16
9	26147	BRACKET ASSY.	Support guard
10	33633	CHAIN	Fertiliser 107 links
	36370	CHAIN	Fertiliser 110 links (Direct Drill)
	10615	LINK	Connecting
	33634	CHAIN	53 links (box in rear pos.)
11	30979	CHAIN	Grain 103 links
	35342	CHAIN	Grain 105 links (Direct Drill)
	10615	LINK	Connecting
	33634	CHAIN	53 links (box in rear pos.)
12	18669	BOLT	Special tensioner
13	18668	ROLLER	Chain tensioner
14	FBW4	WASHER	Flat ∅3/8” dia
15	22899	ARM	Chain tensioner
16	17604J1	NUT	Hex M10
17	22726	SPACER	Tensioner
18	33640	GUARD	Chain secondary G & F (Std. TCD)
	42476	GUARD ASSY.	Drives (2 bin DD, Raised TCD)
	37761	GUARD ASSY.	Chain L/H (4 bin)
	37949	GUARD ASSY.	Primary Drive L/H (4 bin)
19	33641	GUARD ASSY.	Ext. (Std. TCD)
20	22543	GUARD	Chain primary drive
21	19389	TENSIONER	Drive
22	18436	WHEEL	Tensioner for primary drive
23	18674	CHAIN	52 links x 0.625p (secondary)

ITEM	PART No	DESCRIPTION		
24	22690	CHAIN	90 links x 0.625p (primary)	
25	29977	SPROCKET ASSY.	15T x 25T	
	18524	SLEEVE	Bearing plain	
26	24173	SPROCKET	26T (30” wheels)	
	35529	SPROCKET	28T (28” wheels)	
	20789	SPROCKET	29T (30” wheels 24R 4 Bin only)	
27	18531	CLUTCH HALF		
28	18530	SLEEVE	Bearing plain	
29	18532	CLUTCH HALF		
30	18681	SPRING		
31	18715	BEARING	Flange	
32	22567	PLATE	Clutch assy.	
33	33623	TUBE CARRIER ASSY.	Gearbox L/H	
	36368	CRADLE ASSY.	Gearbox L/H (Direct Drill)	
	37721	CRADLE ASSY.	Gearbox L/H (4 bin)	
34	33638	SHAFT	Secondary	
	18596	NIPPLE	Grease self tapping	
35	22594	WIRE ROPE	∅1/8” x 400mm clutch	
36	18533	FERRULE	clutch	
37	18676	PEG	Clutch	
38	21825	YOKE ASSY.	Clutch	
39	18679	PLATE	Clutch	
40	22273	PLATE	Mounting guard bottom	
41	22547	BRACKET	Mounting guard bottom	
42	37936	GEARBOX	Complete R/H (4 bin)	…[7]
43	42734	SPROCKET	Dogged 19T (4 bin)	…[26 & 27]
44	37649	SLEEVE	Clutch (4 bin)	…[28]
45	37648	CLUTCH HALF	R/H (4 bin)	…[29]
46	37689	GUARD ASSY.	Tertiary R/H (4 bin)	…[4]
47	39915	TUBE CARRIER ASSY.	Gearbox R/H (4 bin)	…[33]
	37595	CRADLE ASSY.	Gearbox R/H (4 bin)	…[33]
48	37654	YOKE ASSY	Clutch R/H (4 bin)	…[38]
49	37697	PLATE	Clutch assy – long (4 bin)	…[32]
50	37650	PLATE	Clutch – long (4 bin)	…[39]
51	37680	SPROCKET	14T x 5/8p (27T 4 bin R/H)	…[6]
52	42530	SPROCKET	13T x 5/8p (24T 4 bin R/H)	…[6]
53	37762	GUARD ASSY	Chain R/H (4 bin)	…[18]
54	37950	GUARD ASSY	Primary Drive R/H (4 bin)	…[18]
55	10641	SLEEVE	Sprocket 19T (4 bin)	

Note: items 42 – 55 are not shown. They relate to the R/H side (4 bin models only). The equivalent L/H side parts item numbers are shown in brackets [ ].

DRIVES, CLUTCH, GUARDS – HARDWARE

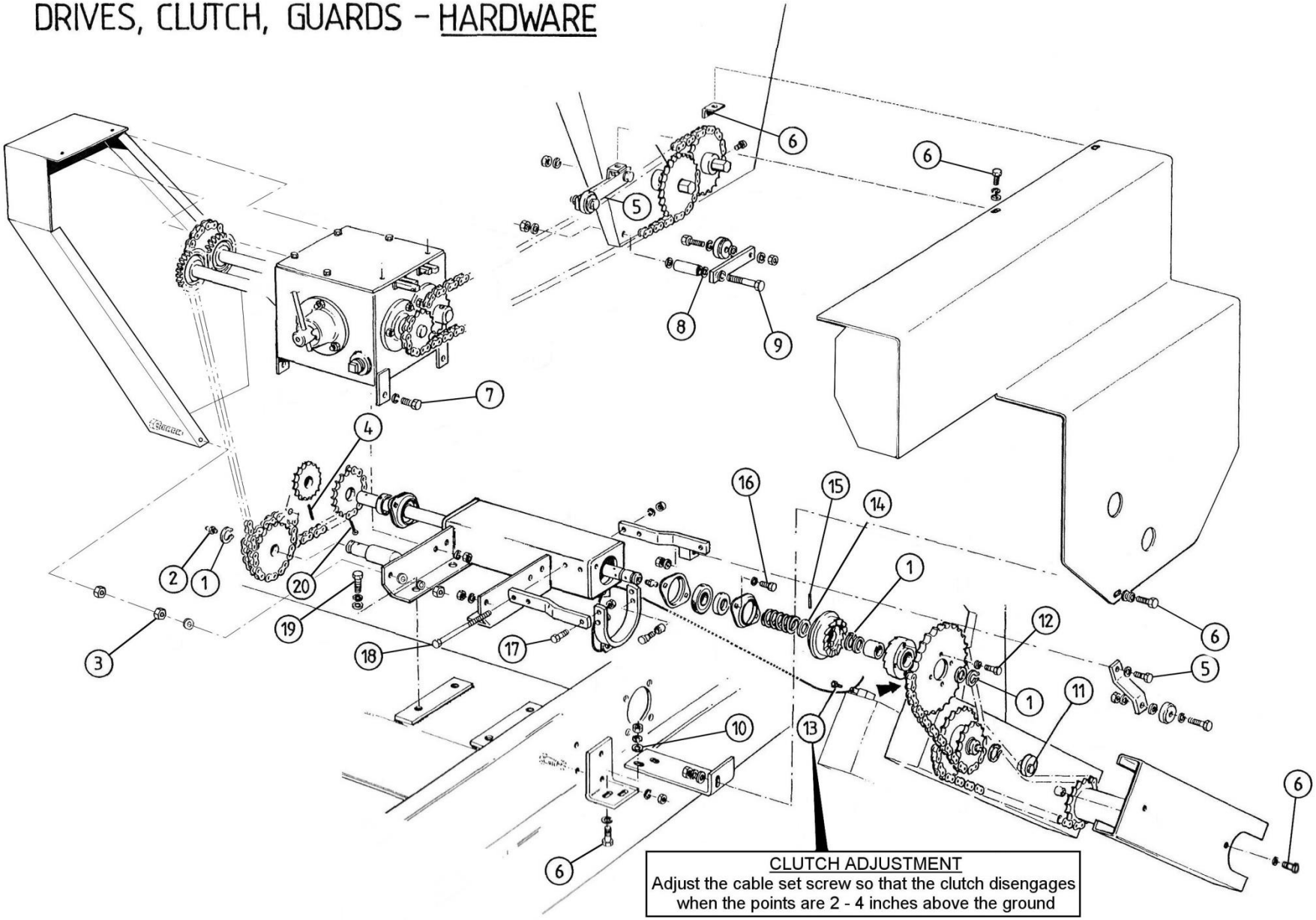

DRIVES, CLUTCH, GUARDS – HARDWARE AND ASSEMBLIES

ITEM	PART No	DESCRIPTION	
1	18675	CIRCLIP	
2	18596	NIPPLE	Grease
3	16882J1	NUT	Hex M12
		SETSCREW	Hex M12 x 30
	17616J1	WASHER	Spring ∅12
		WASHER	Flat ∅12
4	18819	PIN	∅5 x 50 sellock
5	18876	SETSCREW	Hex M12 x 30
	17616J1	WASHER	Spring ∅12
	16882J1	NUT	Hex M12
6	18463	BOLT	Hex M8 x 20
	18465	WASHER	Spring ∅8
	18464	NUT	Hex M8
7	18877	SETSCREW	Hex M10 x 25
	17776J1	WASHER	Spring ∅10
	17777J1	NUT	Hex M10
8	FBW6	WASHER	Flat ∅1/2”
9	21598	BOLT	Hex M12 x 60
10	FBW4	WASHER	Flat ∅3/8”
11	18877	SCREW	Hex M10 x 25
	FBW4	WASHER	Flat ∅3/8”
	17776J1	WASHER	Spring ∅3/8”
12	18463	BOLT	Hex M8 x 20
	18465	WASHER	Spring ∅8
13	17966J1	SETSCREW	Hex M6 x 12
14	18534	WASHER	Clutch
15	18871	PIN	Sellock ∅6 x 36
16	18748	SETSCREW	Hex M8 x 12 Gr. 4.6
	18465	WASHER	Spring ∅8
17	18660	PIN	Swivel clutch
	17777J1	NUT	Hex M10
18	18729	BOLT	Hex M10 x 140
	17776J1	WASHER	Spring ∅10
	17777J1	NUT	Hex M10
19	22695	SETSCREW	Hex M16 x 25
	17606J1	WASHER	Spring ∅16
20	17589J1	PIN	Split cotter ∅5 x 60

ITEM	PART No	DESCRIPTION	
		TCD ONLY PARTS	
21	16882J1	NUT	Hex M12
	22545	ROD	Threaded M12
	17616J1	WASHER	Spring ∅12
22	18655	SETSCREW	Hex M6 x 16
		(ITEM 21 REPLACES ITEM 3 ON TCD’s)	
		ASSEMBLIES	
	18518	CLUTCH HALF ASSY.	Items 27 & 28 (pg 34)
	11202	CLUTCH HALF ASSY.	Items 43 & 44 (pg 34)
	33637	SHAFT ASSY, SECONDARY	Items 34 (pg 34) - 33638 & 18596
	36425	KIT, HECTAREMETER (FARMSCAN)	
	19388	TENSIONER ASSY. DRIVE CHAIN	Items 12-14, 16 & 21
	22898	TENSIONER ASSY. CHAIN TERTIARY	Items 12-16
	36369	KIT, CHAINS & TENSIONERS (Direct Drill)	

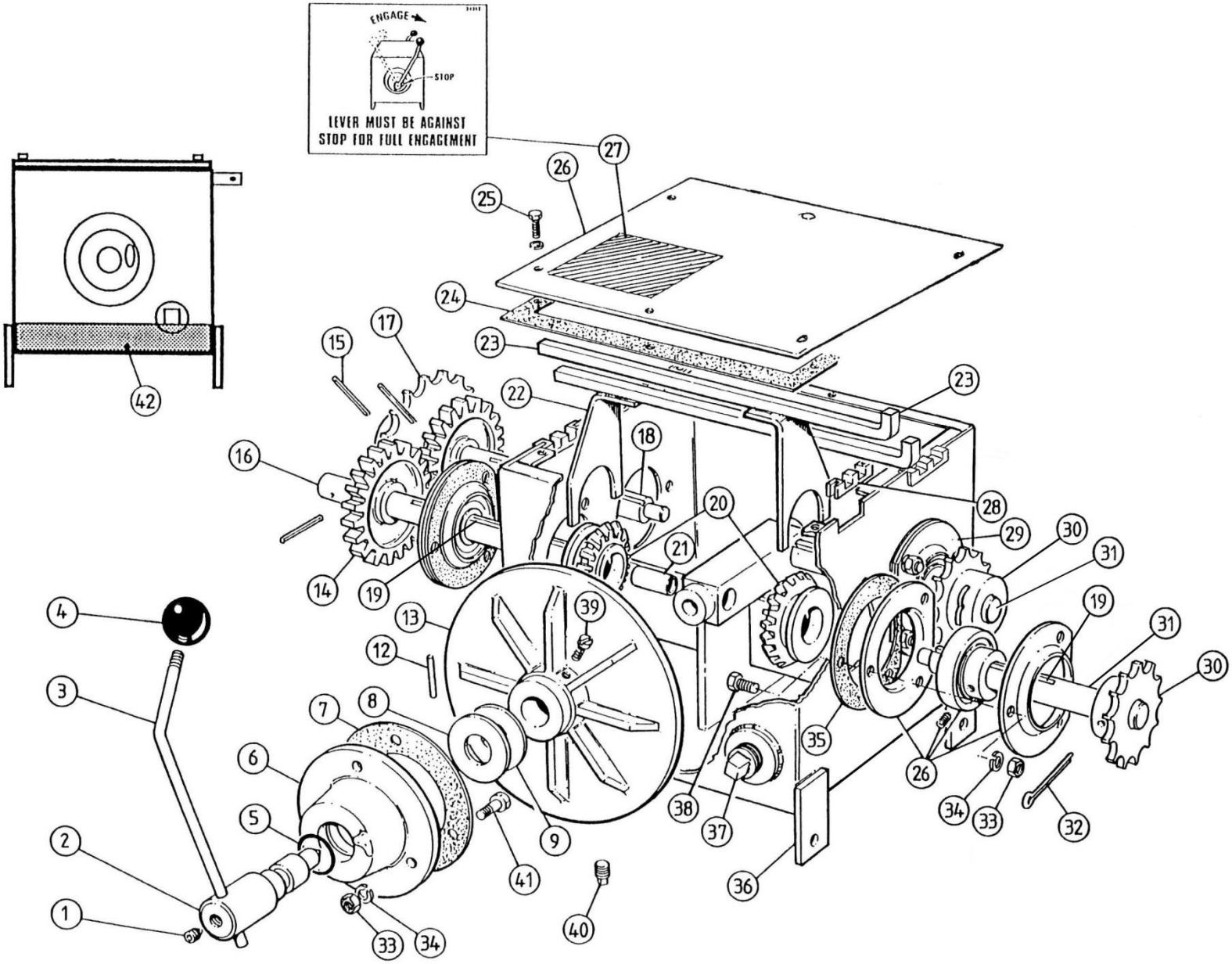
ENGAGE
STOP
LEVER MUST BE AGAINST
STOP FOR FULL ENGAGEMENT
1
2
3
4
5
6
7
8
9
12
13
14
15
16
17
18
19
20
21
22
23
24
25
26
27
28
29
30
31
32
33
34
35
36
37
38
39
40
41
42

GEARBOX

ITEM	PART No	DESCRIPTION	
1	18663	SCREW	grub M10 x 10
2	32844	SHAFT	sungear
3	33276	LEVER	gearbox
4	10440	KNOB	selector
5	18512	'O' RING	1 ¼" x 1 ½" x 1/8"
6	33278	CAP END	gearbox
7	18462	GASKET	cap end
❖8	20518	WASHER	flat I.D. 24 x 15t
❖9	18466	WASHER	flat ∅24
❖10	36777	SHIM WASHER	(0.1mm) – not shown
❖11	36778	SHIM WASHER	(0.7mm) – not shown
12	18661	PIN	sellock ∅5 x 45
13	32840	GEAR	sun
14	33622	GEAR	input 25T x 8P
15	27307	PIN	sellock ∅6 x 40
16	33619	SHAFT	output – grass
17	33764	SPROCKET	12T
18	33620	SHAFT	input
19	18500	KEYSTEEL	90mm long
♠20	42512	PINION ASSY.	
21	32845	BUSH	sintered
22	36268	SELECTOR ASSY.	numbered gear
23	36266	SELECTOR ASSY.	lettered gear
24	18508	GASKET	cover top
25	17966J1	SETSCREW	M6 x 12
	18504	WASHER	spring ∅6
26	18506	LID	gearbox
27	34362	TRANSFER	gearbox engagement
28	18460	GUIDE	nylon
29	32847	BEARING	'Y'
30	30041	SPROCKET	13T x 5/8"P
31	33617	SHAFT	super
32	17589J1	PIN	cotter ∅5 x 50
33	18464	NUT	hex M8
34	18465	WASHER	spring ∅8
35	18475	GASKET	bearing
36	33608	BOX ASSY.	gear includes item 38
37	18513	PLUG	¾" BSP sq. hd.

ITEM	PART No	DESCRIPTION	
38	18502	SETSCREW	hex M8 x 16
39	18474	SCREW	locating
40	18493	PLUG	drain ¼" BSPT
41	18463	BOLT	hex M8 x 20
42	18511	OIL	SAE 120 I L
	33607	GEARBOX, COMPLETE	Items 1-39
	37936	GEARBOX, COMPLETE R/H	Items 1-39
		(NOTE: 37936 USED ONLY ON 4 BIN VERSION)	
	18490	GEAR	input 15 tooth (optional)
	18491	GEAR	input 35 tooth (optional)

♠ Note: Previous pinion assembly with brazed key use P/N 32841

❖ Note: Shim washers are used as required to provide correct fit of sun gear

HYDRAULICS

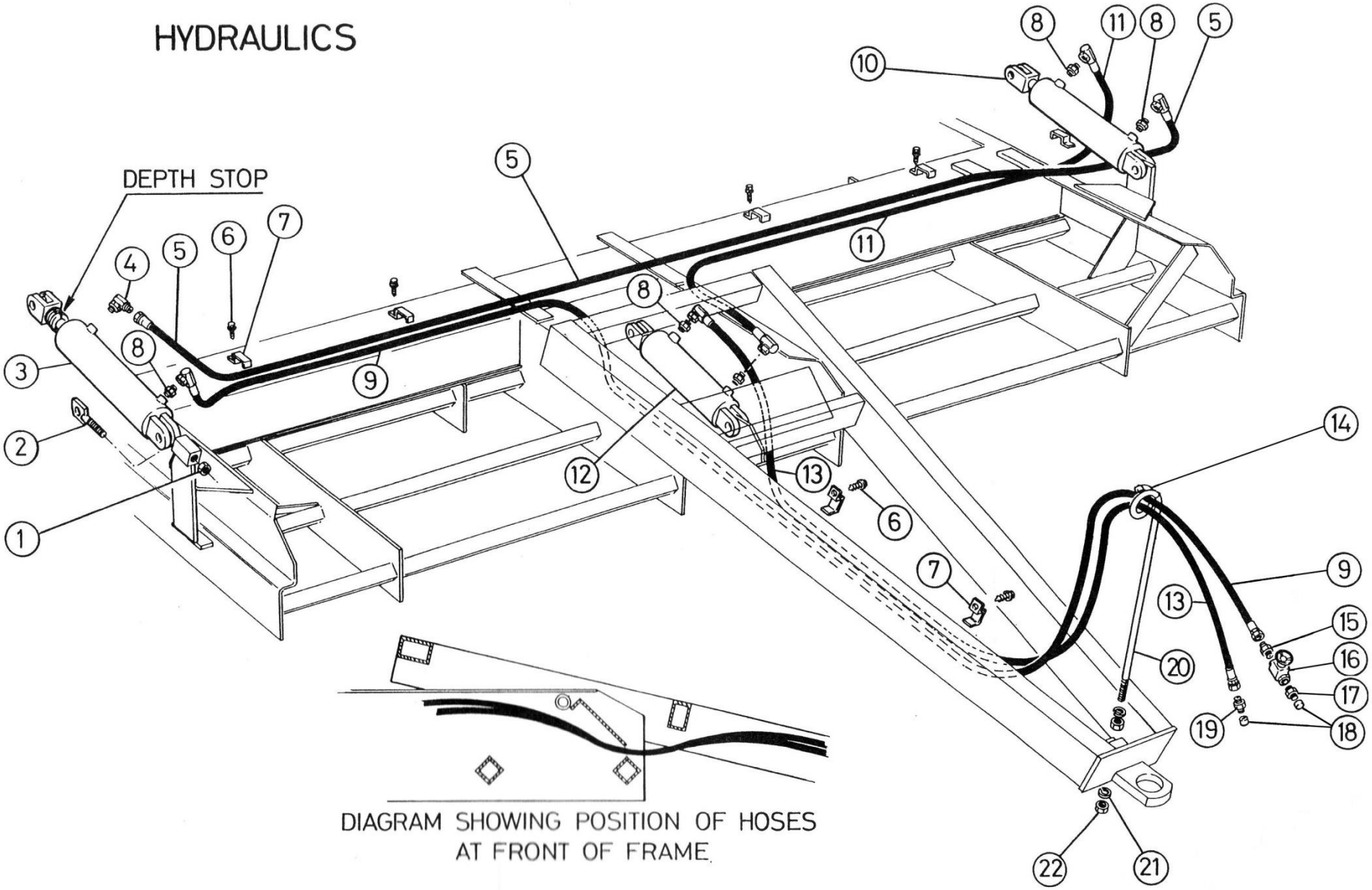

DIAGRAM SHOWING POSITION OF HOSES AT FRONT OF FRAME.

HYDRAULICS

ITEM	PART No	DESCRIPTION	
1	17267J1	NUT	Hex M36 R/H
2	21648	LUG ASSY.	Ram adjustable
3	32671	RAM ASSY.	Phasing ∅4” x 12”
	(27086	SEAL KIT FOR 32671)	
4	15248J1	ELBOW	¾” UN x ¾” JIC
5	21740	HOSE ASSY.	¾” JIC elb/st 4350mm 21 row
	21741	HOSE ASSY.	¾” JIC elb/st 5430mm 27 row
	29035	HOSE ASSY.	¾” JIC elb/st 6500mm 33 row
	21740	HOSE ASSY.	¾” JIC elb/st 4350mm 20 row
	39896	HOSE ASSY.	¾” JIC elb/st 4850mm 24 row
	39894	HOSE ASSY.	¾” JIC elb/st 5500mm 28 row
6	16940J1	BOLT	Self drilling #12 x 20 HWF
7	20687	CLIP	Suit 2 synflex hoses (3/8”)
8	18850	NIPPLE	¾” UNC ‘O’ring x ¾” JIC
9	29035Y	HOSE ASSY.	¾” JIC elb/st 6500mm 21 row
	23769Y	HOSE ASSY.	¾” JIC elb/st 7040mm 27 row
	29036Y	HOSE ASSY.	¾” JIC elb/st 7600mm 33 row
	29035Y	HOSE ASSY.	¾” JIC elb/st 6500mm 20 row
	39897Y	HOSE ASSY.	¾” JIC elb/st 7150mm 24 row
	39895Y	HOSE ASSY.	¾” JIC elb/st 7300mm 28 row
10	33506	RAM ASSY	Phasing ∅3-3/4” x 12”
	(27356	SEAL KIT FOR 33506)	
11	21607	HOSE ASSY.	¾” JIC elb/elb 2850mm 21 row
	21625	HOSE ASSY.	¾” JIC elb/elb 3280mm 27 row
	21167	HOSE ASSY.	¾” JIC elb/elb 3850mm 33 row
	21607	HOSE ASSY.	¾” JIC elb/elb 2850mm 20 row
	39898	HOSE ASSY.	¾” JIC elb/elb 2950mm 24 row
	21625	HOSE ASSY.	¾” JIC elb/elb 3280mm 28 row
12	33507	RAM ASSY	Phasing ∅4-1/4” x 8”
	(31679	SEAL KIT FOR 33507)	
13	23766B	HOSE ASSY.	¾”JIC elb/st 4660mm
14	22008	HOSE	19mm ID PVC 0.36m
15	17257J1	NIPPLE	3/8” BSPT x ¾” JIC
16	15503J1	VALVE	Needle 3/8” BSPT female
17	15525J1	NIPPLE	½” BSP x 3/8” BSP
18	15534J1	CAP	½” BSP malleable
19	14598J1	NIPPLE	½” BSP x ¾” JIC
20	23331	CARRIER	Hose
21	17606J1	WASHER	Spring ∅16
22	18021	NUT	Hex M16 Gr. 8.8 plated

ASSEMBLIES

CARRIER ASSEMBLY Items 14, 20-22

NOTE:
SOME PART NUMBERS HAVE A LETTER (R, G, Y OR B) AT THE END. THIS INDICATES THAT THE PIPE OR HOSE IS COLOUR CODED WITH A COLOURED BAND AT ONE END. THIS COLOUR CODING IS TO AID THE USER IN IDENTIFYING THE SEPARATE HYDRAULIC CIRCUITS SO THAT THEY CAN BE CORRECTLY CONNECTED TO THE TRACTOR AND ENSURE SAFE OPERATION.
SEE THE TABLE BELOW FOR THE RELATIONSHIP BETWEEN COLOUR AND HYDRAULIC CIRCUIT.

WARNING
THE HYDRAULICS (OTHER THAN THE QUICK-COUPLING CONNECTION TO THE TRACTOR) MUST BE CONNECTED BY A QUALIFIED HYDRAULICS TECHNICIAN AND THE OPERATION OF ALL HYDRAULIC FUNCTIONS CHECKED IN A CONTROLLED AND SAFE SITUATION. THIS IS TO ENSURE THAT EVERYTHING IS CORRECT BEFORE THE MACHINE IS USED. ANY MODIFICATIONS TO THE HYDRAULICS MADE AFTER THE MACHINE LEAVES THE FACTORY MUST BE MADE BY A QUALIFIED PERSON AND IT IS THE RESPONSIBILITY OF THAT PERSON TO ENSURE THEY ARE CORRECT AND SAFE.
IT IS THE RESPONSIBILITY OF WHOEVER CONNECTS THE MACHINE TO THE TRACTOR TO ENSURE THAT IT IS CONNECTED CORRECTLY.

LETTER	COLOUR	HYDRAULIC CIRCUIT
Y	YELLOW	WHEEL LIFT UP
B	BLUE	WHEEL LIFT DOWN

580 TYNE ASSEMBLY

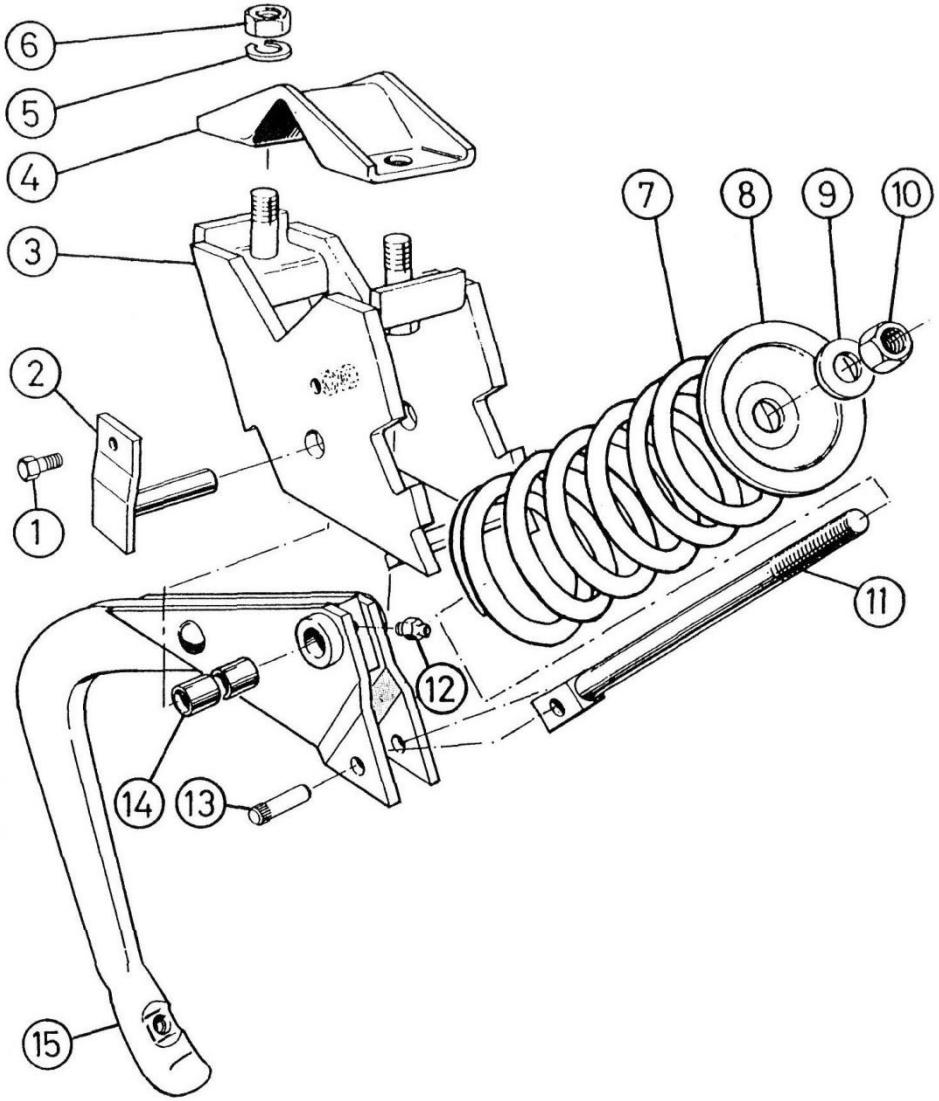

580 TYNE ASSEMBLY

ITEM	PART No	DESCRIPTION		ITEM	PART No	DESCRIPTION
1	18824	BOLT	Hex M10 x 30			
	17776J1	WASHER	Spring ∅10			
	17777J1	NUT	Hex M10			
2	22931	PIN ASSY.	Cranked			
3	22921	CARRIER ASSY.				
4	22925	CLAMP	Top tyne			
5	17606J1	WASHER	Spring ∅16			
6	18021	NUT	Hex M16			
7	22927	SPRING	∅16			
8	22926	CUP	Spring ∅16			
9	18312	WASHER	Flat ∅20 structural			**ASSEMBLIES**
10	22026	NUT	Nyloc M20			
11	22913	ROD ASSY.	Spring E.O.T.		22900	TYNE ASSY. COMPLETE ‘580’ EDGE-ON
12	18596	NIPPLE	Grease self tapping			Items 1-10 & 22902
13	18813	PIN	Spring rod			
14	21612	BUSH	Tyne split		22902	TYNE & SPRING ROD ASSY. EDGE ON
15	22904	TYNE ASSY.	Edge-On ‘580’			Items 11-15
					29522	TYNE EXTENSION KIT (refer page 51)

620 TYNE ASSEMBLY

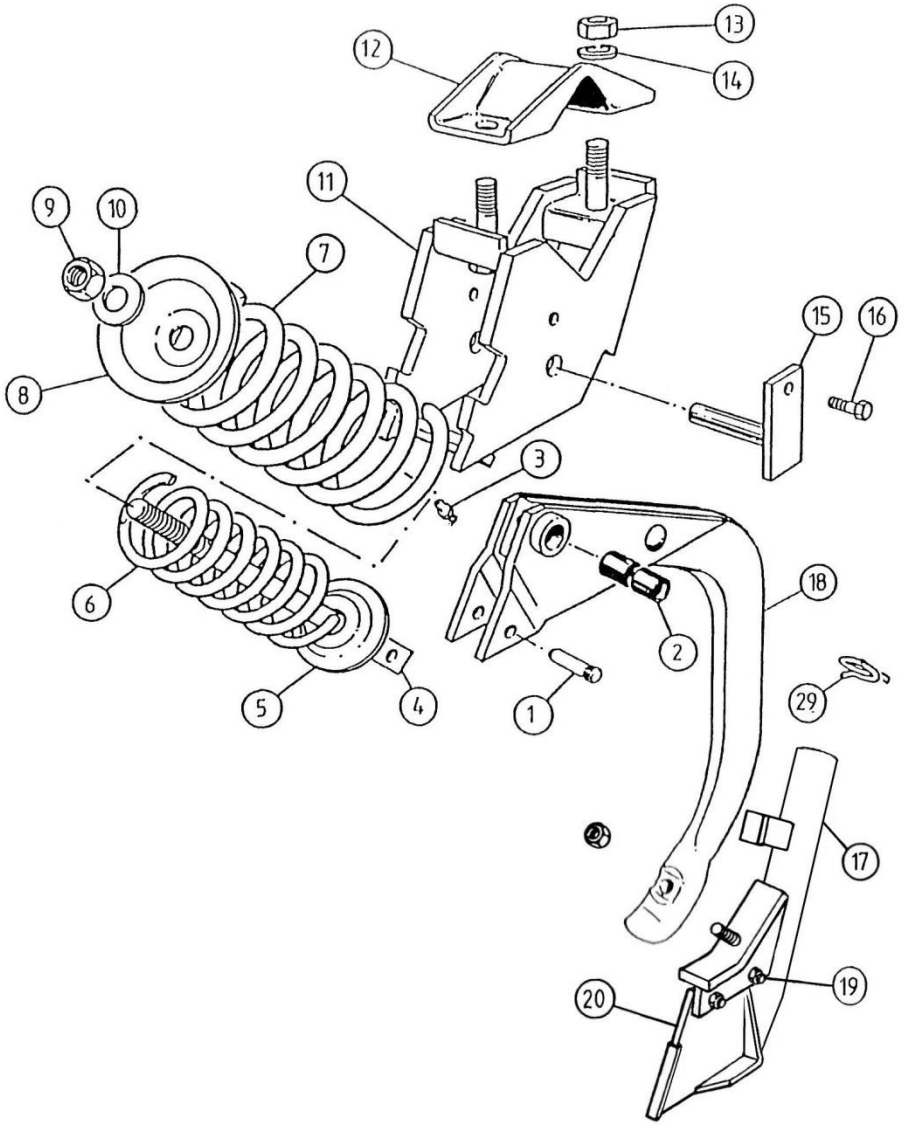

Tine depth extensions are used for 55mm (2 1/8") deeper cultivation on the front 2 rows of tines (cultivating) when seeding.
Tine depth extensions are available for Flexmodule Wideseeders, Trash Culti Drills and other implements fitted with the 580 + 620 Tyne Assy.
Depth extension 55mm (2 1/8").

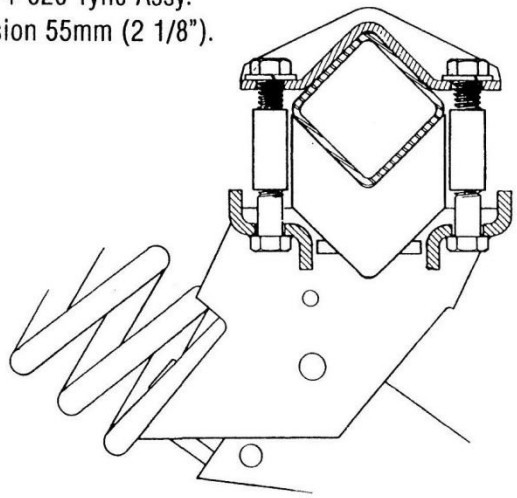

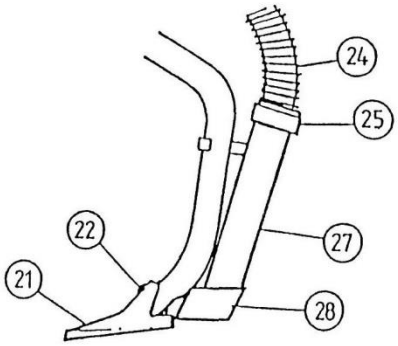

620 TYNE ASSEMBLY & POINTS V MOUNTED

ITEM	PART No	DESCRIPTION	
1	18813	PIN	Spring rod
2	21612	BUSH	
3	18596	NIPPLE	Grease self tap
4	22913	ROD	Spring E.O.T.
5	35236	CUP	Spring small
6	35237	SPRING	∅11” x 60 I.D.
7	22927	SPRING	∅16
8	22926	CUP	Spring
9	22026	NUT	Hex M20 nyloc
10	18312	WASHER	Flat ∅20
11	22921	CARRIER ASSY	
12	22925	CLAMP	Top tyne
13	18021	NUT	Hex M16
14	17606J1	WASHER	Spring ∅16
15	22931	PIN ASSY.	Tyne
16	18824	BOLT	Hex M10
	17776J1	WASHER	Spring ∅10
	17777J1	NUT	Hex M10
17	36713	BOOT ASSY.	
18	36104	TYNE ASSY.	Edge-on 620
19	33259	BOLT	Hex M8
	18464	NUT	Hex M8
20	33258	POINT	Blade
21	308-22	POINT	5”
22	18098	BOLT/NUT	1-15/16” x 7/16” BSW
	17616J1	WASHER	Spring ∅12 plated
23	22168	CLIP	Tyne
24	21863	HOSE	Barvac ∅35 x 1100
	21839	HOSE	Barvac ∅35 x 800
25	22244	COLLAR	Locking hose
26	22169	BOLT	cup hd. sq. neck M8 x 45
	18465	WASHER	Spring ∅8
	18464	NUT	Hex M8
27	36053	SOWING BOOT	Wide (Early Model)
	36710	SOWING BOOT	DIRECT DRILL (not illustrated)
	37768	BOOT ASSY	Double (4 Bin, not illustrated)
28	27796	ATTACHMENT	Firm seed bed E.O.T.
29	35341	CLIP	Hose ‘T’ boot

ITEM	PART No	DESCRIPTION
		ASSEMBLIES
	33256	‘T’ BOOT Items 17, 19, 20
	36102	TYNE & SPRING ROD ASSY. 620 Items 1-4, 18
	36100	TYNE ASSY. COMPLETE ‘V620’ EDGE-ON Items 5-16 and 36102
	29522	TYNE EXTENSION KIT (optional – refer page 51)

Note: 37768 is standard on 4 Bin machines only. It is optional on 2 Bin machines

630 TYNE

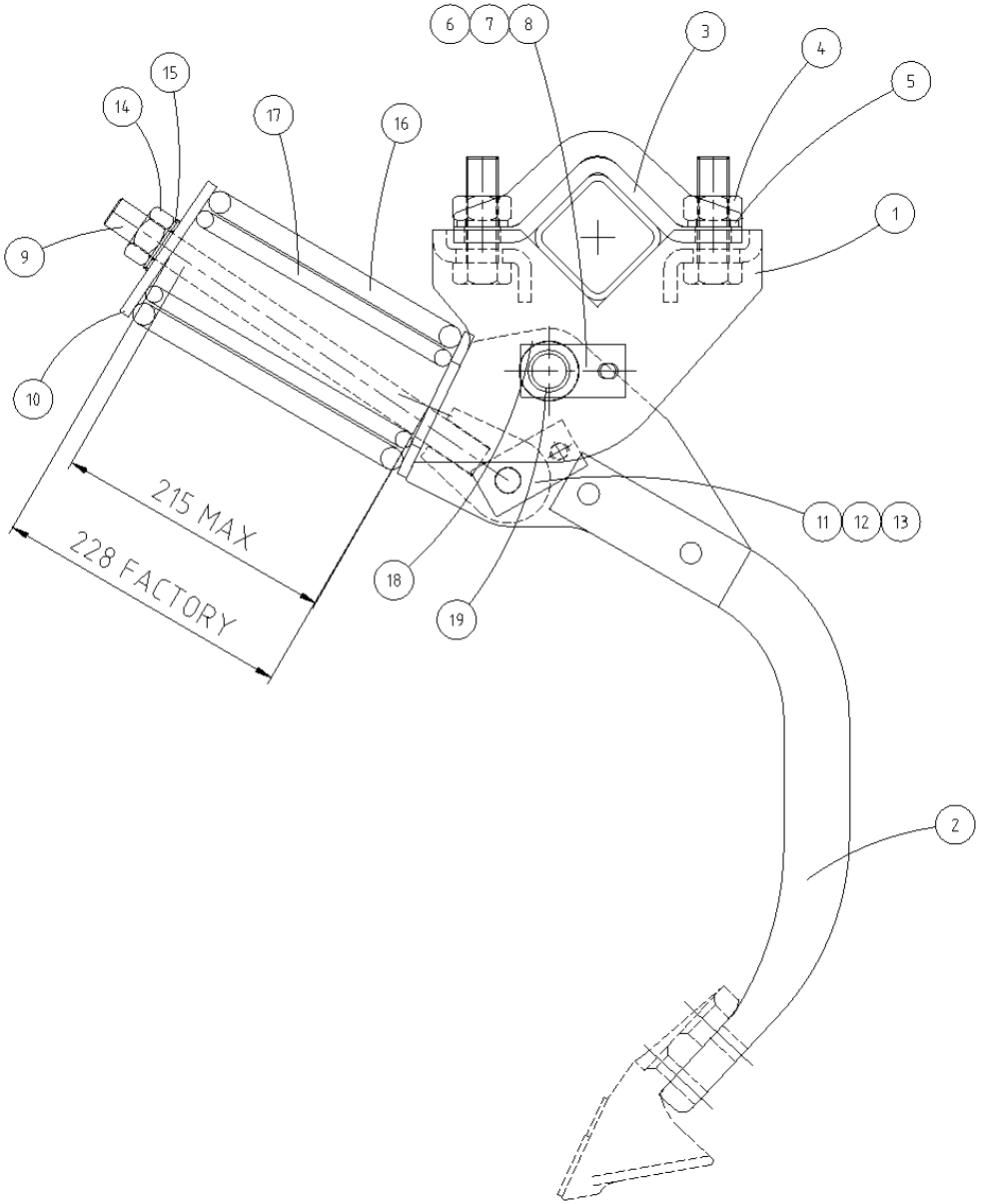

630 TYNE

ITEM	PART No	DESCRIPTION
	42930	TYNE ASSEMBLY COMPLETE
1	44146	CARRIER ASSEMBLY
2	44147	TYNE ASSEMBLY
3	43542	CLAMP ASSEMBLY, TYNE
4	18042	NUT, HEX – M24
5	18935	WASHER, SPRING 24mm
6	42936	PIN, PIVOT ASSEMBLY (Ø25.4mm)
7	20799	BOLT HEX – M10 x 35
8	31993	NUT, NYLOC – M10
9	44148	ROD, SPRING
10	42924	CUP, SPRING – TOP
11	42939	PIN, ROD – ASSEMBLY (Ø19mm)
12	19046	BOLT, HEX – M10 x 65
13	31993	NUT, NYLOC – M10
14	21467	NUT, NYLOC - M24
15	FBW11	WASHER, FLAT
16	37385	SPRING, OUTER
17	37384	SPRING, INNER
18	42952	NIPPLE, GREASE
19	42933	BUSH

KIT – AGITATOR G & F BOX

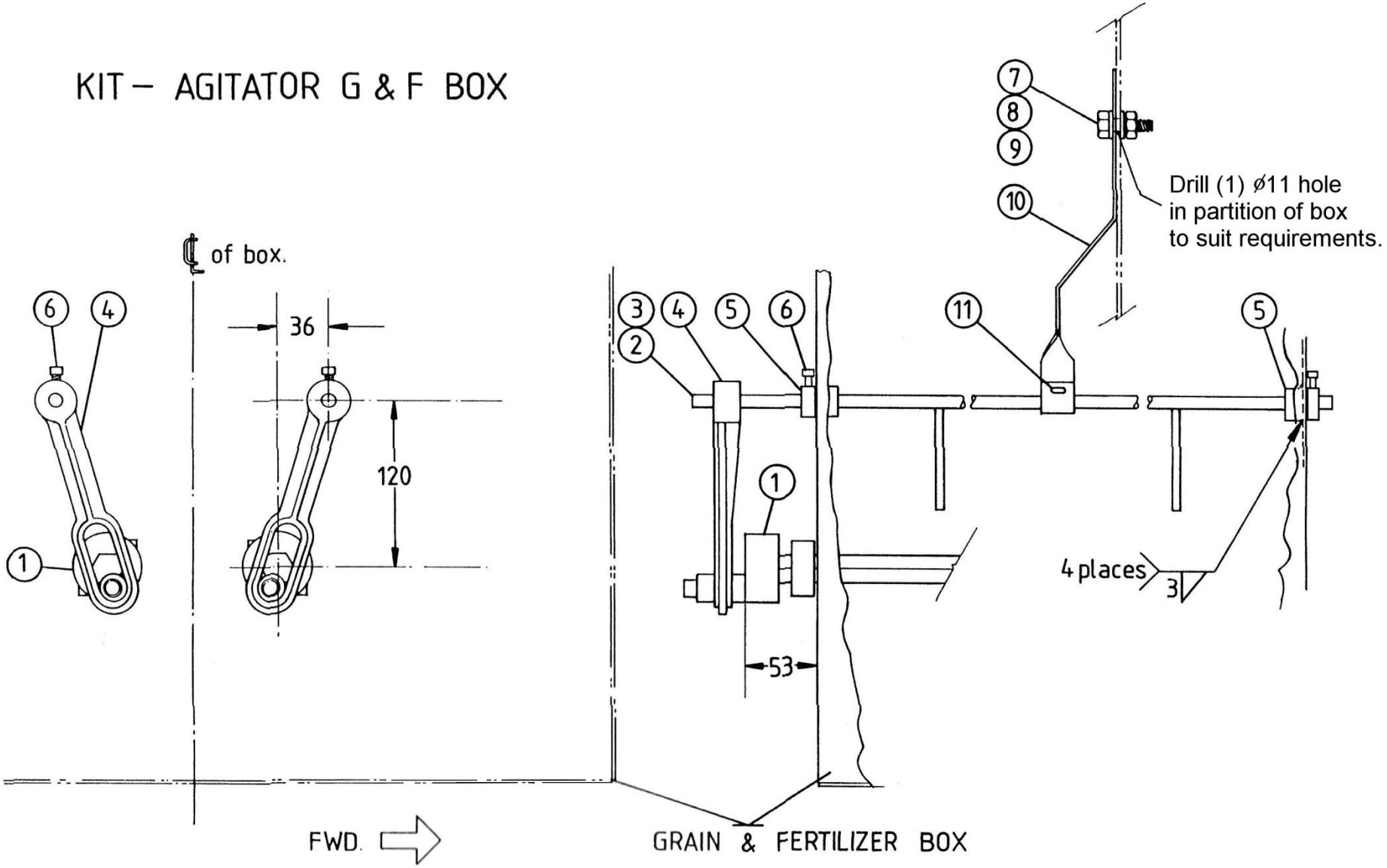

KIT – AGITATOR GRAIN & FERTILIZER BOX

ITEM	PART No	DESCRIPTION		ITEM	PART No	DESCRIPTION
1	29913	CRANK ASSY.	Agitator			
2	29904	AGITATOR ROD ASSY.	15 row			
3	29905	AGITATOR ROD ASSY.	21 row			
4	1-85	ARM	Agitator rod			
5	1-21	COLLAR	Agitator rod			
6	303-31	SET SCREW				
7	18824	BOLT	Hex M10 x 30			
8	FBW5	WASHER	Flat black ∅7/16”			
9	17777J1	NUT	Hex M10			
10	29912	SUPPORT	Agitator rod			
11	16945J1	PIN	Cotter ∅3.2 x 20			
	29900	KIT – AGITATOR GRAIN & FERTILIZER BOX (15 ROW)	Items 1, 2, 4 – 11			
	29901	KIT – AGITATOR GRAIN & FERTILIZER BOX (21 ROW)	Items 1, 3-11			

BOOT ASSEMBLY

ITEM	PART No	DESCRIPTION	
1	33258	POINT	CMTB-32 “Mini T”
2	36711	POINT	CBP-60 “Baker T”
3	36713	‘T’ BOOT	
4	18414	NUT	M12 Gr 8
5	22689	WASHER	flat ∅12
6	36893	BOLT	hex M12 x 50 Gr 8.8
7	17776J1	WASHER	spring ∅10
8	17777J1	NUT	M10 Gr 8
9	22434	BOLT	hex M10 x 30 Gr 8.8
10	18465	WASHER	spring ∅8
11	18464	NUT	M8 Gr 8
12	36892	BOLT	hex M8 x 30 Gr 8.8
		PASTURE DRILL BOOT ASSEMBLY	
	33256	WITH MINI T-BOOT.	
	36712	WITH BAKER INVERTED T-BOOT.	

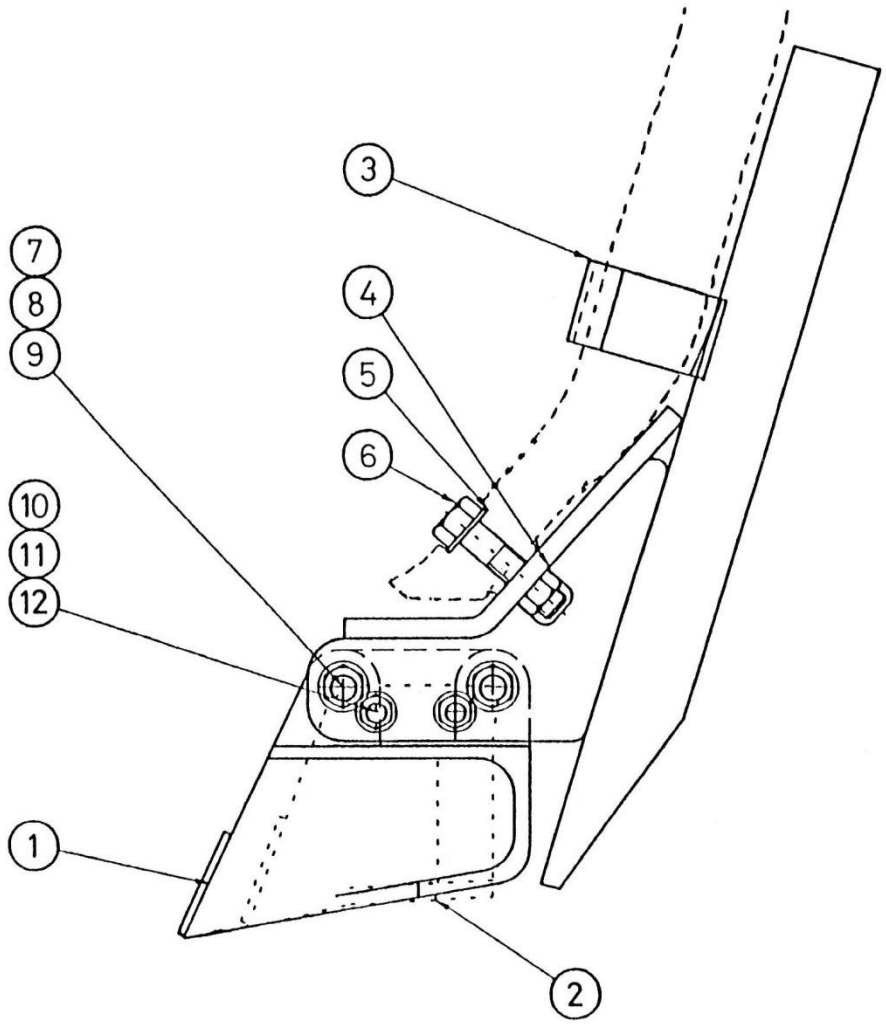

THE PASTURE DRILL BOOT ASSEMBLY IS A MULTI-POINT ADAPTOR, TO ACCEPT EITHER THE MINI T-BOOT OR THE BAKER INVERTED T-BOOT.

ACCESSORIES

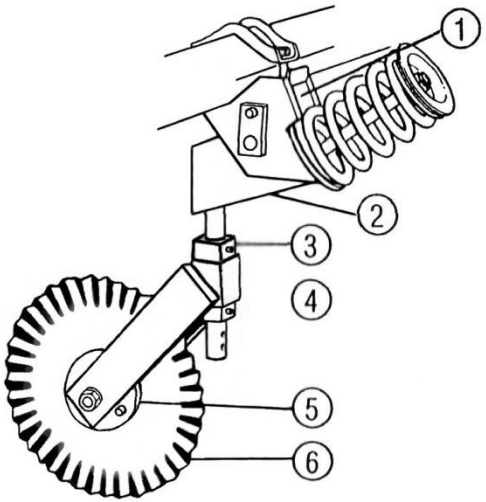

SWIVEL COULTER
PART No: 29740

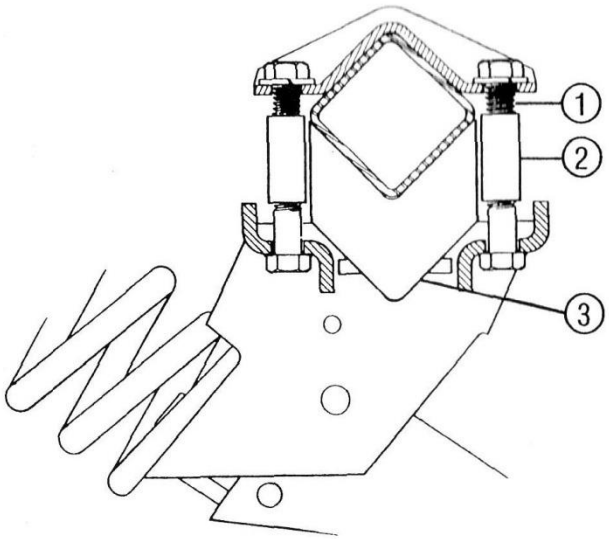

TYNE EXTENSION KIT
PART No: 29522

ITEM	PART No	DESCRIPTION	ITEM	PART No	DESCRIPTION
1	Refer Tyne Assy.	HEAD ASSY.	1	29944	SCREW
			2	29945	SPACER
2	29741	SPRING ROD & ROCKER	3	29946	EXTENSION SPACER
3	29754	COLLAR STOP			
4	29755	CASTOR ASSY.			
5	29746	SPINDLE			
6	29748	COULTER & BEARING ASSY.			
	29752	COULTER FLUTED 14”			
	FHR3	RIVET			
	15049J1	O RING			
	29751	BEARING			
	29750	CORE, BEARING			
	32006	CAGE ASSY.			

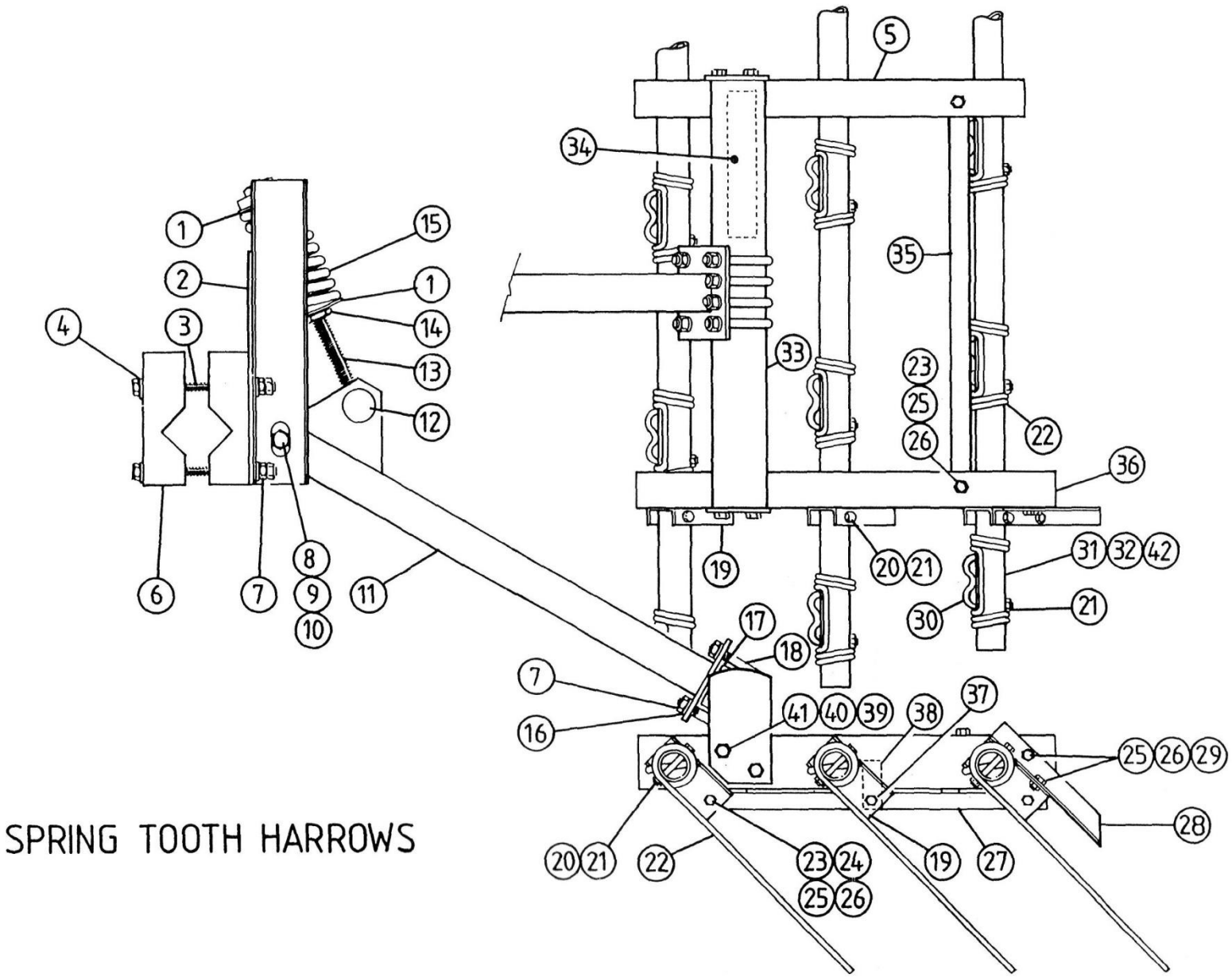

SPRING TOOTH HARROWS

SPRING TOOTH HARROWS

ITEM	PART No	DESCRIPTION		ITEM	PART No	DESCRIPTION	
1	18407	CUP	Spring	40	18021	NUT	Hex M16
2	31115	CARRIER ASSY.		41	17606J1	WASHER	Spring ∅16
3	31113	ROD ASSY.	Clamp	42	31124	BAR	Harrow 8 tyne
4	22689	WASHER	Flat ∅12				
5	22825	TIE BAR	Harrow L/H			KITS	
6	22805	CLAMP	Carrier				
7	18414	NUT	Hex M12		30805	KIT	Clamping hardware
8	18879	BOLT	Hex M16				Items 3, 4, 6, 7, 16-18
9	FBW8	WASHER	Flat ∅5/8”				
10	18814	NUT	Conelok M16		31186	KIT	2nd arm
11	31116	ARM ASSY.					Items 1-18
	18596	NIPPLE	Grease self tapping				
12	22818	TOGGLE			31106	KIT ARM COMPLETE	
13	31120	ROD ASSY	Spring				Items 1, 2, 8-15
14	18022	NUT	Hex M20 Gr 8.8				
15	18800	SPRING	∅11.2		31109	KIT, 2 x 6 UNIT	
16	17616J1	WASHER	Spring ∅12				Items 5, 19-30, 32-41
17	22820	CHANNEL	Grip				
18	22819	CLAMP	‘U’ M12		31110	KIT, 3 x 6 UNIT	
19	22821	LOCATOR	Tyne bar				Items 5, 19-30, 32, 34-36, 39-41
20	18897	BOLT	Hex M10 x 75				
21	21424	NUT	Hex M10 conelok		31107	KIT, 2 x 4 UNIT	
22	21874	TOOTH	Coiled 16”				Items 5, 19-31, 33-41
23	18520	BOLT	Hex M10 x 25				
24	FBW4	WASHER	Flat ∅3/8”		31108	KIT, 3 x 4 UNIT	
25	17776J1	WASHER	Spring ∅10				Items 5, 19-31, 33-36, 39-41
26	17777J1	NUT	Hex M10 Gr 8.8				
27	24185	ROD ASSY.	Linkage		31111	KIT, 2 x 8 UNIT	
28	22827	LEVER	Actuating				Items 5, 19-30, 33-42
29	18429	SET SCREW	Hex M10 x 16				
30	22828	RETAINER	Tooth		31112	KIT, 3 x 8 UNIT	
31	24188	BAR	Harrow 4 tyne				Items 5, 19-30, 33-36, 39-42
32	24189	BAR	Harrow 6 tyne				
33	31122	BAR ASSY.	Tie				
34	15871J3	TRANSFER	John Shearer			4/6/8 is width in tooth pairs (item 22)	
35	30307	STRAP	Tie				
36	22826	TIE-BAR	Harrow R/H				
37	22434	BOLT	Hex M10 x 30			2/3 in no. of bars (items 31, 32 & 42)	
38	27438	GUIDE	Rod bolted				
39	20704	SET SCREW	M16 x 30				

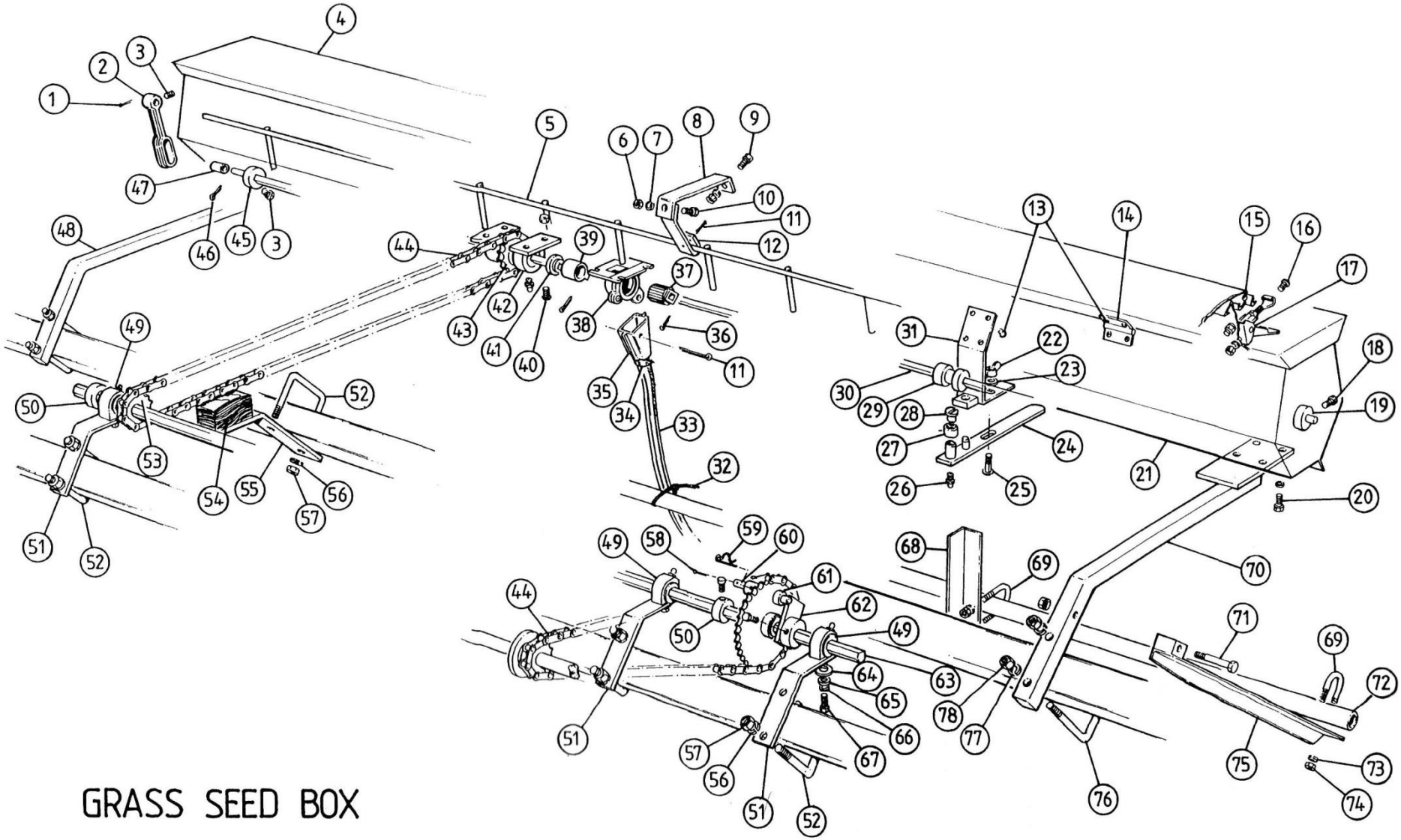
GRASS SEED BOX

GRASS SEED BOX

ITEM	PART No	DESCRIPTION		ITEM	PART No	DESCRIPTION	
1	16945J1	PIN	Cotter ∅3.2 x 20	23	18465	WASHER	Spring ∅8
2	1-85	ARM	Agitator	24	34052	LEVER ASSY.	
3	20282	SCREW	Grub M10 x 10	25	21999	BOLT	Cup hd. sq. neck M8 x 25
4	22848	LID ASSY	21 row	26	18596	NIPPLE	Grease self tapping
	22849	LID ASSY	27 row	27	18533	FERRULE	Clutch
	29055	LID ASSY	33 row	28	24193	PEG	Lever
	19712	LID ASSY	20 row	29	24194	ROLLER	Feed
	19713	LID ASSY	24 row	30	22860	SHAFT	Distributor 21 row
	19714	LID ASSY	28 row		22861	SHAFT	Distributor 27 row
5	22854	AGITATOR	21 row		22059	SHAFT	Distributor 33 row
	22859	AGITATOR	27 row		28809	SHAFT	Distributor 20 row
	29057	AGITATOR	33 row		28810	SHAFT	Distributor 24 row
	19751	AGITATOR	20 row		28811	SHAFT	Distributor 28 row
	19752	AGITATOR	24 row	31	34055	INDICATOR ASSY.	
	19753	AGITATOR	28 row	32	19850	RETAINER	Hose short
6	18656	NUT	Hex M6	33	F170	HOSE	2’9” long
7	18504	WASHER	Spring ∅6	34	18439	WIRE	Tube to cup
8	34048	BRACKET	Support box	35	1-55	CUP ASSY.	Tube
9	18655	SET SCREW	Hex M16 x 16	36	17579J1	PIN	Cotter ∅5 x 22
10	19569	BOLT	Hex M6 x 20	37	1-86A	ROLLER	Fluted
11	17883J1	PIN	Cotter	38	GBD-1	DISTRIBUTOR ASSY.	
12	34051	SUPPORT	Agitator		34058	RIVET	Pop ∅3/16”
13	19739	HINGE		39	1-87A	SHUT OFF	
14	19877	RIVET	Pop ∅3/16”	40	34092	BOLT	Gutter
15	19355	RIVET	Pop ∅5/32” x ½”		19742	NUT	Nyloc ∅3/16”
16	18872	SCREW	Pan hd. ∅5/32 x ½”	41	1-75A	WASHER	Distributor
	SPW14	WASHER	Spring ∅3/16”	42	1-80	BEARING	
	18873	NUT	Hex 5/32”		18596	NIPPLE	Grease self tapping
17	19337	LATCH & STRIKE ASSY.		43	19747	SPROCKET ASSY.	16T
18	303-31	SET SCREW	Collar	44	22879	CHAIN	79 links
19	1-21	COLLAR	Agitator rod		24473	LINK	Connecting
20	19151	BOLT	Hex M8 x 25	45	WF14	CRANK ASSY.	Agitator
	18465	WASHER	Spring ∅8	46	17883J1	PIN	Cotter ∅3.2 x 32
21	34038	BOX	Sub assy 21 row	47	1-53	ROLLER	Agitator crank
	34039	BOX	Sub assy 27 row	48	34076	BRACKET ASSY.	Box R/H
	34097	BOX	Sub assy 33 row	49	19733	BEARING	
	34634	BOX	Sub assy 20 row		18422	BUSH	Shaft agitator
	34635	BOX	Sub assy 24 row		18596	NIPPLE	Grease self tapping
	34637	BOX	Sub assy 28 row	50	18649	BLOCK	Indicator
22	22000	NUT	Wing	51	19749	SUPPORT	Bearing

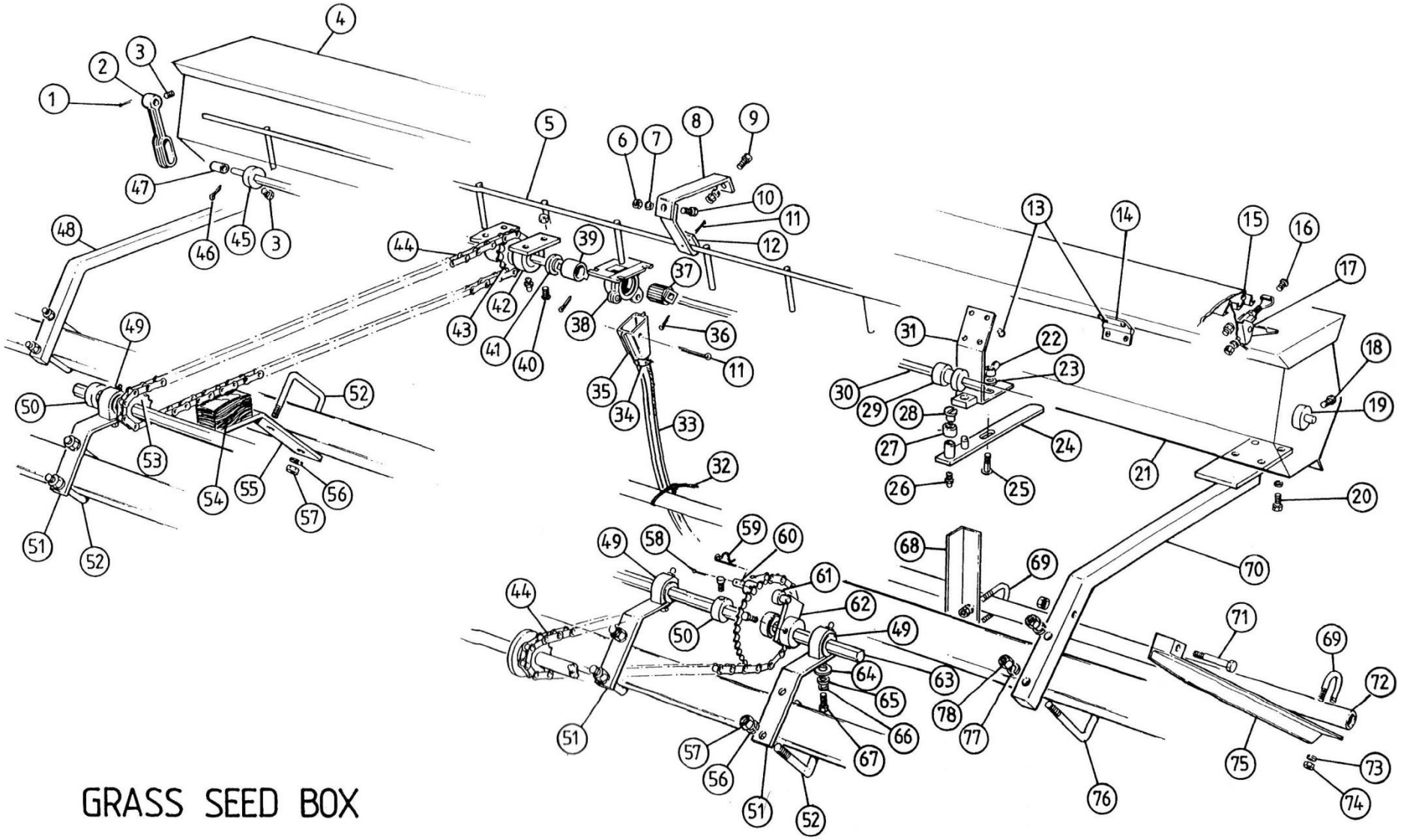
GRASS SEED BOX

GRASS SEED BOX CONT'D

ITEM	PART No	DESCRIPTION	
52	18714	CLAMP	M16
53	19724	SPROCKET ASSY.	16T
54	18912	BLOCK	Chain tensioner
	CWS1	SCREW	Wood 1" x 6g csk
55	19731	SUPPORT	Chain tensioner
56	17606J1	WASHER	Spring ∅16
57	18021	NUT	Hex hd. M16
58	18745	PIN	Sellock
59	H160-106	PIN	Hair
60	34070	PIN	Drive
61	34062	SPROCKET ASSY	38T
	18422	BUSH	Shaft
62	34067	DRIVE ASSY.	Shaft
	20282	SCREW	Grub M10 x 10
63	22867	SHAFT	Drive 21 row
	22868	SHAFT	Drive 27 row
	29061	SHAFT	Drive 33 row
	42119	SHAFT	Drive 20 row
	42120	SHAFT	Drive 24 row
	42121	SHAFT	Drive 28 row
64	24184	WASHER	Mud guard
65	FBW4	WASHER	Plain 3/8"
66	18465	WASHER	Spring ∅8
67	19884	BOLT	Hex hd. M8 x 16
68	20285	DEFLECTOR	L/H harrow chain
	20284	DEFLECTOR	R/H harrow chain
69	11709	CLAMP	Harrow beam M10
70	34072	BRACKET ASSY.	Box L/H
71	19893	BOLT	Hex M12 x 80
	19894	NUT	Hex conelok M12
72	22870	BAR	Stabilizer 21 row
	22871	BAR	Stabilizer 27 row
	29062	BAR	Stabilizer 33 row
	19887	BAR	Stabilizer 20 row
	19888	BAR	Stabilizer 24 row
	19889	BAR	Stabilizer 28 row
73	17776J1	WASHER	Spring ∅10
74	17604J1	NUT	Hex M10
75	34074	ARM ASSY.	Stabilizer
76	34077	CLAMP	Bracket

ITEM	PART No	DESCRIPTION		
77	17616J1	WASHER	Spring ∅12	
78	18414	NUT	Hex M12	
	NOTE:	FOR INCREASED SOWING RATE 2.4:1 REPLACE ITEM 53 WITH P/N 19722 SPROCKET ASSY. 38T		
		ALSO PROVIDED:-		
		24528	CHAIN	Ext. 11 links
		24473	LINK	Connecting
		20282	SCREW	Grub M10 x 10
		ASSEMBLIES		
	WF14	CRANK ASSY. AGITATOR	Item 45 comprises:-	
		1-21A	CRANK	agitator
		1-51	PIN	Roller agitator crank
		20282	SCREW	Grub M10 x 10
		1-53	ROLLER	Agitator Crank
		17883J1	PIN	Cotter ∅3.2 x 32
	18509	TUBE & CUP ASSY.		
	19734	BEARING ASSY.	Item 49 complete.	
	34061	SPROCKET & BUSH ASSY.	Item 61 complete	
	34036	GRASS SEED BOX ASSY.	21 row	
	34037	GRASS SEED BOX ASSY.	27 row	
	34096	GRASS SEED BOX ASSY.	33 row	
	34627	GRASS SEED BOX ASSY.	20 row	
	34628	GRASS SEED BOX ASSY.	24 row	
	34630	GRASS SEED BOX ASSY.	28 row	
	34078	GRASS SEED BOX COMPLETE	21 row	
	34079	GRASS SEED BOX COMPLETE	27 row	
	34101	GRASS SEED BOX COMPLETE	33 row	
	42116	GRASS SEED BOX COMPLETE	20 row	
	42117	GRASS SEED BOX COMPLETE	24 row	
	42118	GRASS SEED BOX COMPLETE	28 row	
		TRANSFERS : -	(not illustrated)	
	35657	TRANSFER	Opening numbers	
	15873J3	TRANSFER	John Shearer	
	15968J1	TRANSFER	Name & serial number	
	34093	TRANSFER	Grass seed box	

① **JOHN SHEARER**
FINEST IN THE FIELD

② **JOHN SHEARER** **DIRECT DRILL**
FINEST IN THE FIELD

③ DANGER
DO NOT RIDE ON THIS IMPLEMENT!

④ WARNING
DO NOT CARRY BAGS
OF GRAIN AND FERTILIZER
ON LOADING PLATFORM

⑤ **PROTECT YOUR EQUIPMENT**
THE MANUFACTURERS OF THE SEED AND FERTILIZER CONVEYOR TUBES STRESS THE IMPORTANCE OF PROTECTING RUBBER BY STORING IN A DARK, DRY COOL PLACE WHEN NOT IN USE. REMOVE THEM AND STORE AWAY IN BETWEEN SEASONS. DO NOT LEAVE ON MACHINE IN THE OPEN AFTER YOU HAVE FINISHED SEEDING ESPECIALLY IN THE STRETCHED POSITION.

㉚ **John Shearer**
model
serial no
Made in Australia

⑥
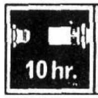

⑦
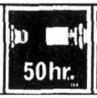

⑧


⑨
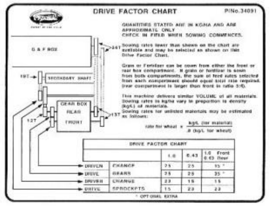

DRIVE FACTOR CHART P/No.34091

QUANTITIES STATED ARE IN KG/HA AND ARE APPROXIMATE ONLY
CHECK IN FIELD WHEN SOWING COMMENCES.

Sowing rates lower than shown on the chart are available and may be selected as shown on this Drive Factor Chart.

Grain or Fertilizer can be sown from either the front or rear box compartment. If grain or fertilizer is sown from both compartments, the sum of feed rates selected from each compartment should equal total rate required. (rear compartment is larger than front in ratio 3:2).

This machine delivers similar VOLUME of all materials. Sowing rates in kg/ha vary in proportion to density (kg/L) of materials.
Sowing rates for unlisted materials may be estimated as follows:

$$\text{rate for wheat} \times \frac{\text{kg/L (for material)}}{.8\ \text{(kg/L for wheat)}}$$

DRIVE FACTOR CHART				
		1.0	0.43	1.0 Front 0.43 Rear
DRIVEN	CHANGE	25	25	35 *
DRIVE	GEARS	25	25	35 *
DRIVEN	CHANGE	23	15	15
DRIVE	SPROCKETS	15	23	23

* OPTIONAL EXTRA

⑩
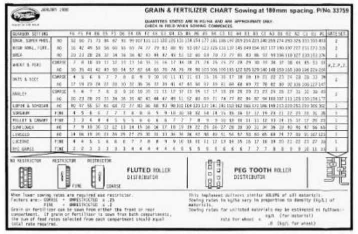

GRAIN & FERTILIZER CHART Sowing at 180mm spacing. P/No. 33759

QUANTITIES STATED ARE IN KG/HA AND ARE APPROXIMATE ONLY.
CHECK IN FIELD WHEN SOWING COMMENCES.

⑪


⑫ HYDRAULIC FLUID
WE USE AND RECOMMEND SHELL DONAX TD TRANSMISSION FLUID A PRODUCT OF
The SHELL Co of Aust Ltd
SHELL DONAX TD IS COMPATIBLE WITH FLUIDS SPECIFIED BY TRACTOR MANUFACTURERS AND IS SUITABLE FOR USE AS A MULTI-PURPOSE TRANSMISSION HYDRAULIC FLUID IN TRACTORS. THIS INCLUDES TRACTORS FITTED WITH POWER SHIFT TRANSMISSIONS, COMMON HYDRAULIC SYSTEMS WET CLUTCHES AND WET BRAKES

⑬ WARNING
MAXIMUM TOWING
SPEED
25 km/h

⑭ WARNING
HYDRAULIC SYSTEMS THRIVE ON
CLEAN OIL
ENSURE THAT YOUR TRACTOR HAS:
- CLEAN OIL AND
- AN EFFECTIVE OIL FILTER

PRIOR TO COUPLING THIS IMPLEMENT

⑮ GREASE ROCKSHAFT BEARINGS
WITH WHEELS RAISED
CLEAR OF THE GROUND

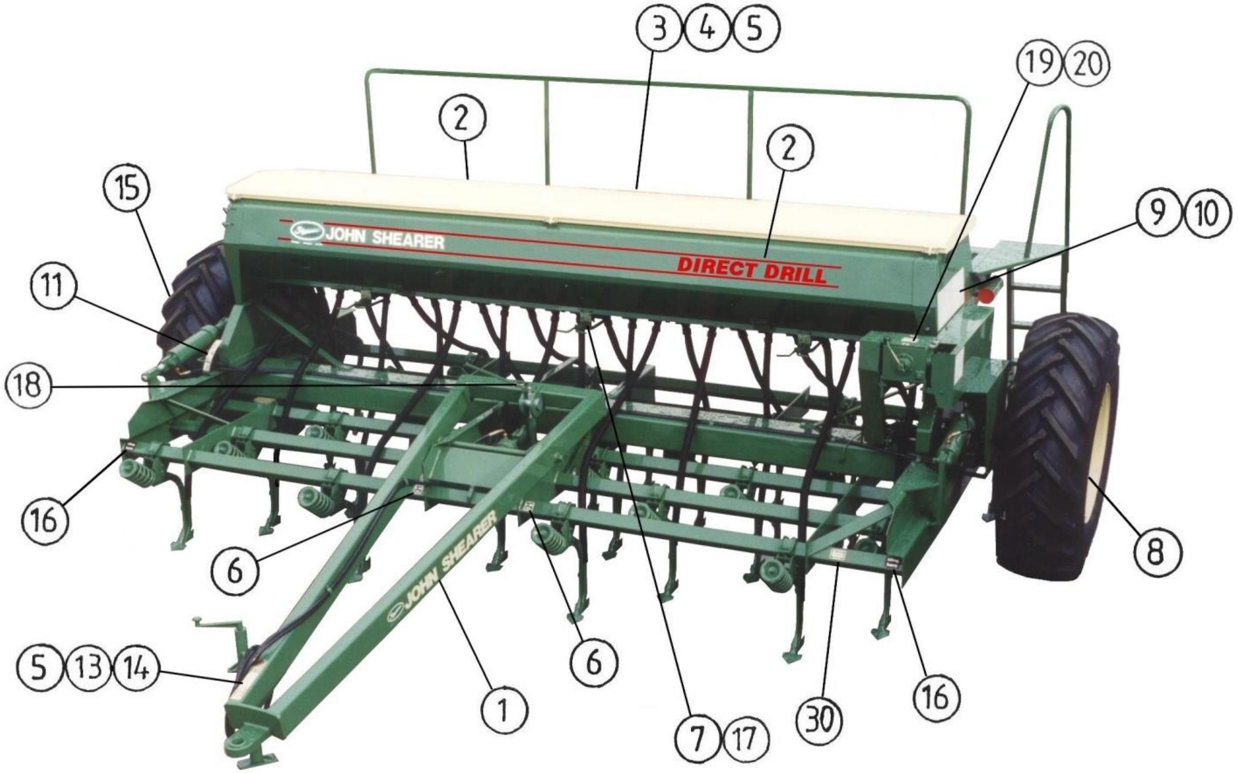

⑯ **sling here**

⑰
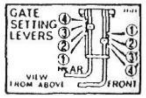

⑱ TO RAISE
FRONT TYNES

⑲ FRONT
BOX
27461

⑳ REAR
BOX
27462

TRANSFERS

ITEM	PART No	DESCRIPTION	
1	36242	TRANSFER	John Shearer trademark
	15875J2	TRANSFER	John Shearer
2	42466	TRANSFER	John Shearer Direct Drill
3	22699	TRANSFER	Do not ride on implement
4	15953J1	TRANSFER	Warning do not carry bags
5	15880J1	TRANSFER	Protect your equipment
6	27463	TRANSFER	Grease 10 hrs
7	27464	TRANSFER	Grease 50 hrs
8	27409	TRANSFER	Grease 200 hrs
9	34091	TRANSFER	Chart – drive factor (page 20)
10	33759	TRANSFER	Chart – G & F 180mm sowing
11	17626J1	TRANSFER	Scale – depth indicator
12	19618	TRANSFER	Transmission oil
13	18949	TRANSFER	Maximum towing speed
14	15982J2	TRANSFER	Warning – clean oil
15	30473	TRANSFER	Grease rockshaft
16	15854J1	TRANSFER	Sling here
17	28851	TRANSFER	Gate setting levers
18	15762J1	TRANSFER	Raise front tynes
19	27461	TRANSFER	Front box
20	27462	TRANSFER	Rear box
21	15968J1	PLATE	J.S. model & serial no.
	16161J1	SCREW	Drive 5/16” x 0.116 x 4U
23	21532	KIT – CARRIER OPERATORS MANUAL	
			Items 24-31
24	20809	TRANSFER	Parts manual
25	20813	PLUG	Tube carrier parts manual
26	20810	SUPPORT	Tube carrier parts manual
27	17986J1	SETSCREW	Hex M6 x 12
28	FBW2	WASHER	Flat ∅¼”
29	18656	NUT	Hex M6
30	GB4	BOLT/NUT	Gutter ¼” BSW x ½”
31	20814	TUBE	Carrier parts manual
	34362	TRANSFER	Engagement (page 40)

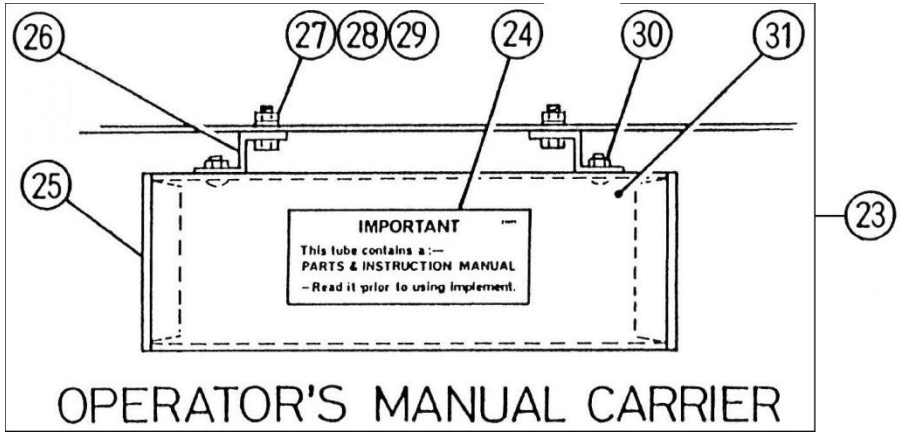

FITTING OF STABILIZER BAR TO 4 BIN DRILL TO SECURE THE SMALL SEEDS HOSES

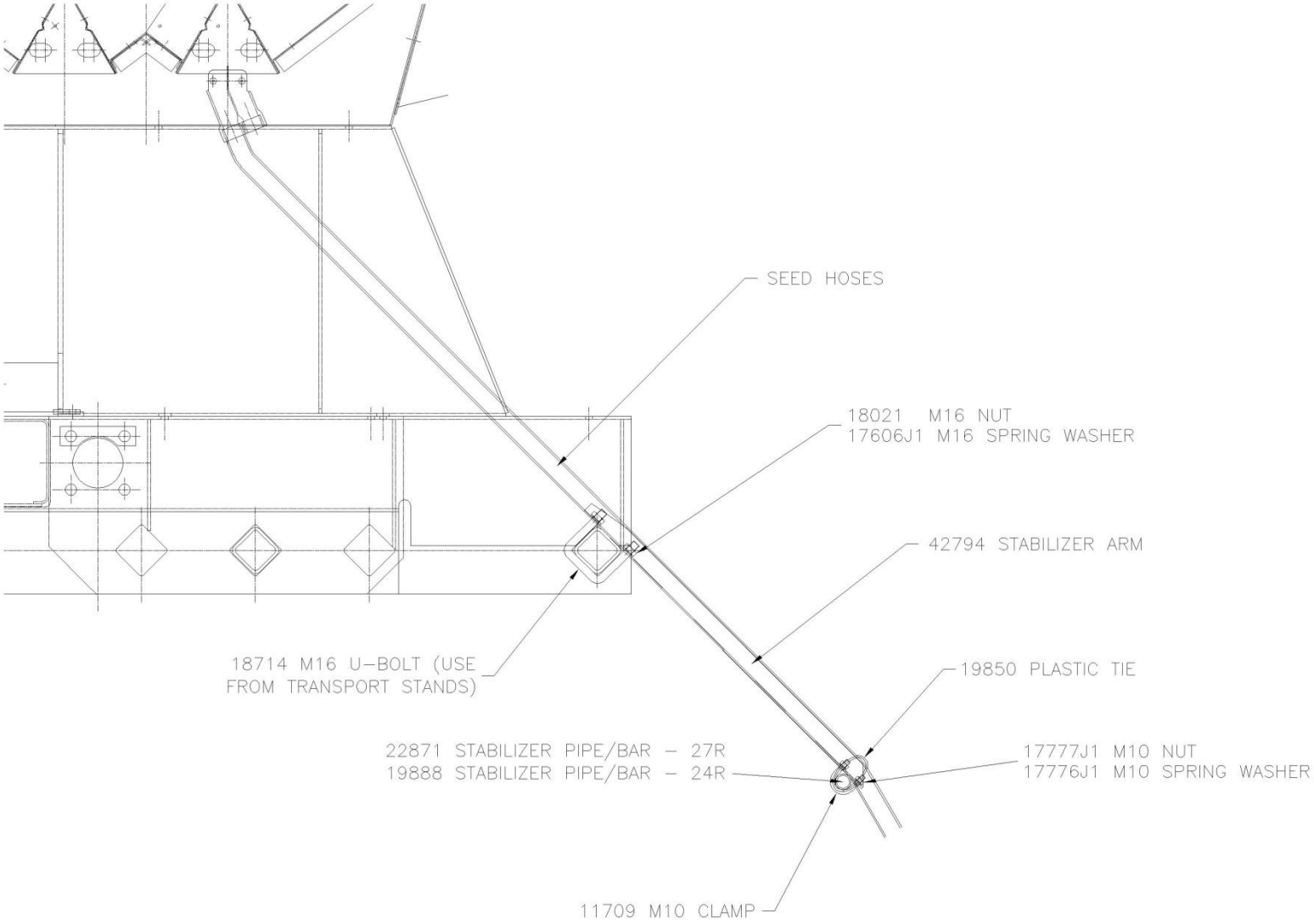

TROUBLE SHOOTING

PROBLEM	**CAUSE**	**REMEDY**
DISTRIBUTORS WILL NOT TURN	Clutch not engaged Gearbox not engaged Gearbox shear pins broken Secondary shaft shear pins broken	Check clutch Check gearbox Replace Replace
FERTILIZER RATE VARIES	Fertiliser build-up on distributors	Clean distributor rollers
SOWING DEPTH DIFFERS FROM ONE SIDE OF THE MACHINE TO THE OTHER	Ram lug assembly not adjusted properly Hydraulic cylinders out of phase	Check ram lug assembly and adjust if necessary Re-phase cylinders (see following page)
DISTRIBUTOR ROLLERS DAMAGE SEED	Gate positions are set too close	Re-adjust gate settings
IMPLEMENT KEEPS DROPPING SEED AND FERTILIZER WHEN IN THE TRANSPORT POSITION	Gate settings too wide Gate settings in cleaning out position	Re-adjust gates to recommended setting
SOWING RATE UNEVEN ACROSS GRAIN AND FERTILIZER BOX	Gate setting is unequal across box	Re-adjust gates to recommended setting

TROUBLESHOOTING - PHASING HYDRAULIC CYLINDERS

[Note: the numbers in brackets below refer to the item numbers on the hydraulics part pages (page 42 & 43)]

The three cylinders are connected in series, such that each moves together to provide a level lift of the implement.

When the implement is RAISED, oil delivered from the tractor is directed to the base of the master cylinder (3), oil from the rod end flows to the base of the cylinder (10), and oil from the rod end of (10) flows to the base end of the hitch cylinder (12), from which oil is returned to the tractor.

To ensure that all cylinders begin work “in phase”, each cylinder has a “phasing bypass” hole in the barrel that allows a small volume of oil to pass across the piston when the cylinder is fully extended (implement fully raised).

To achieve levelling of the implement (initially, or after storage, or as a result of one cylinder having an imperfect piston seal) the implement should be:
- Fully raised,
- The tractor control valve be held in the raise position with the tractor at idle (it may require holding the valve for several minutes to fully purge the system),
- All three cylinders be viewed separately to ensure that they have reached full extension (cylinder travel has ceased),
- The tractor valve is then released and the implement can be lowered, levelled with the levelling screw assembly on the hitch, or transported, as required.

Should a leaking piston seal be suspected, identify cylinder by:
- Phasing the implement as above,
- Lower implement slightly, but with tynes still clear of the ground,
- Close the needle valve (16) to ensure no flow back to tractor,
- Measure the shiny rod extending from each of the cylinders,
- Leave the implement stand long enough to be able to measure any change in the dimensions measured (overnight, and not in direct sunshine is preferable).

The first cylinder in the series, that has “dropped” is at fault. If only one has “dropped”, it is at fault. If more than one has “dropped”, the “first one” of the two/three that “dropped” is at fault – that is either (10) (if two “dropped”) or (3) (if three “dropped”).

This of course assumes no external leakages from any of the cylinders, or their connecting plumbing.

CALIBRATION FACTORS FOR FARMSCAN JACKAL AREA METER

(See page 21 of Farmscan Manual)

NOTE:

- The Area Meter setup is described in the Jackal manual (Section 5.1 page 21) and requires calibrating the machine over a measured distance.

- The width dimension is shown in the table to the right.

USE THE FOLLOWING SETTINGS FOR JOHN SHEARER MACHINES

IMPLEMENT TYPE	IMPLEMENT SIZE	TYRE	Width
6.90 TCD	21 ROW	16.9 x 28 x 6P	3.78
	27 ROW	18.4 x 30 x 8P	4.86
	33 ROW	23.1 x 30 x 8P	5.94
	27 ROW 4 BIN	23.1 x 30 x 8P	4.86
4.90 TCD	20 ROW	14.9 x 24 x 8P	3.60
	20 ROW	16.9 x 28 x 6P	3.60
	24 ROW	16.9 x 28 x 6P	4.32
	28 ROW	18.4 x 30 x 8P	5.04
	24 ROW 4 BIN	18.4 x 30 x 8P	4.32
PASTURE DRILL	10 ROW	235/75 x 15 x 4P	1.80
	13 ROW	235/75 x 15 x 4P	2.34
	16 ROW	235/75 x 15 x 4P	2.88
	19 ROW	235/75 x 15 x 4P	3.42

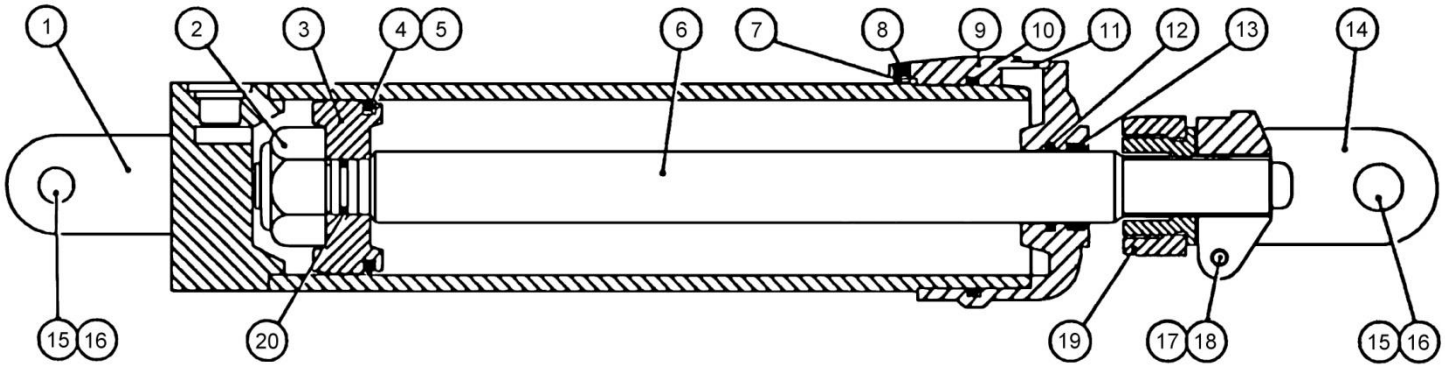

ITEM	32671 4” x 12” PHASING	33506 3 ¾” x 12” PHASING	33507 4 ¼” x 8” PHASING	DESCRIPTION	
1	32673	29041	31666	BASE/BARREL	
2			15444J1	NUT	Nyloc 1 ¼” UNF
	29065	29065		NUT	Nyloc 1” UNF
3	27079	27351	31660	PISTON	
4	*27081	27352	*31667	SEAL	Piston
5	42853	42852	42854	WEAR RING	Piston
6	29043	29043	31663	ROD	Piston
7			15206J1	INSERT	
8			18789	SETSCREW	Soc. Hd M8 x 8
	*28665	*28665		BOLT	Hex M8 x 25 nylon
9	27085	27354	31661	GLAND	
10	*27070	*27353	*31668	‘O’ RING	Gland
11	27083	27083	27083	PLUG, PLASTIC	¾” UN – not supplied if attached to machine
12	*27084	*27084	*31669	SEAL	Gland
13	*16181J1	*16181J1	*27364	WIPER	Rod
14	27023	27023	27023	CLEVIS	
15	27018	27018	27018	PIN	
16	22889	22889	22889	LYNCH PIN & CLIP	
17	26443	26443	26443	SCREW	Soc. hd. cap - M10 x 45
18	17777J1	17777J1	17777J1	NUT	Hex - M10
19	27019			DEPTH STOP ASSEMBLY	
20	*29064	*29064	*27054	‘O’ RING	Piston rod
	27086	27356	31679	SEAL KIT	* DENOTES SEAL KIT PARTS

JACKAL CALIBRATION

1. Press the MENU key until the input the sensor used for calculating rate information is connected to is displayed (input 1 – 6).

2. Press ENTER to edit the input function and use the NAV keys to select the **SPEED** option as shown in Figure 13 below.

Figure 13.

3. Select **SPEED** setting with desired Units.

- **DO NOT MIX METRIC AND IMPERIAL UNITS.**

4. Clear **PULSES** by holding CLEAR for approximately 1 second.

5. Ensure Jackal is in **RUN** mode (when in **HOLD** mode "ON HOLD" is displayed at the top of the screen)

6. Drive a known distance. Jackal should count **pulses**.

7. Enter distance into monitor using NAV keys and hold SET for approximately 1 second to calculate **WHEEL** factor.

8. Enter the Implement **WIDTH** using the NAV keys.

Note: These steps refer to SET and CLEAR buttons. They are activated by the softkeys which will have the words on the screen above the button (as shown in figure 13 above), when in the correct menu.

For more information refer to the Farmscan Jackal manual.

Operation

When the counter is started up for the first time (or after the battery is charged after having run down completely), the total area counter is shown on the display. The UC 300 is set by default to show metric measurements: the area is given in hectares, the speed in km/h and the distance covered in metres. The initial sequence is, therefore:
Pressing the “select” button during operation shows the next measurement on the display, as follows

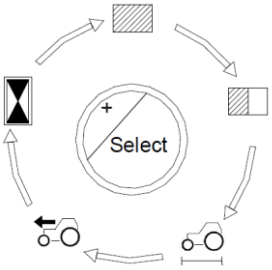

After selecting a measurement it is possible to reset it by pressing and holding the "reset" button for 3 seconds with the exception of the speed of travel, which is instantaneous data).

Programming

As with the totalizers, either metric or imperial units of measurement can be used for the programmable speed and area parameters. To access the programming phase with the UC 300 turned on, press the “Prog” button for 3 seconds and five horizontal dashes appear on the display. The first programmable parameter, “Un”, then appears as shown below;

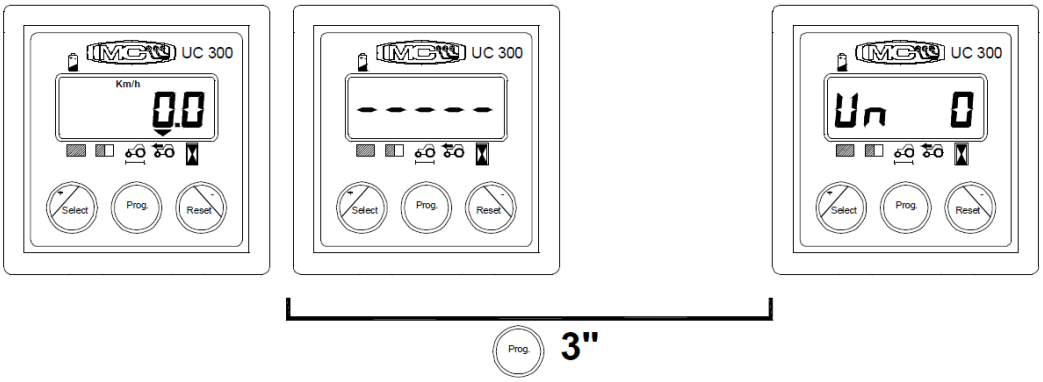

During the programming phase, you can use the “+” and “-” buttons to edit the value of the parameter, then press the “Prog” button to confirm your changes and move on to the next parameter;

Programming the “Un” (unit of measurement) parameter

Programming of this parameter is very important to the work in hand and to the programmable parameters. You need to select either the metric or imperial unit of measurement; you then only need to program the parameters of the UC 300 for the chosen unit of measurement.

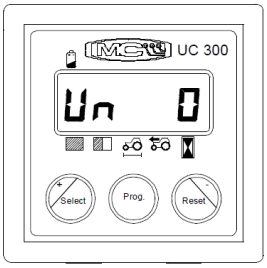	Name of parameter:	Un
	Description:	selection of unit of measurement
	Programmable range:	0 (=metric units) or 1 (=imperial units)
	Default value:	0

Manual programming of parameter “C” (pulses of the speed sensor)

This parameter represents the number of pulses emitted by the speed sensor after each 100 linear metres (or 328 feet) covered by the public works machine;
Enter the programming phase as described above and edit the value with the “+” and “-” buttons; pressing and holding either button will speed up the editing process. After setting the required value, press "Prog" to confirm and move on to the next parameter.

with “Un” = 0 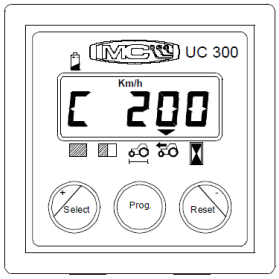	Name of parameter:	C
	Description:	Pulses of the speed sensor after every 100m covered by the machine
	Programmable range:	20 to 999 Steps of 1 pulse
	Default value: 200	

with “Un” = 1 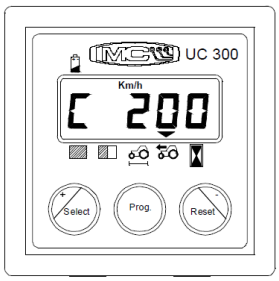	Name of parameter:	C
	Description:	Pulses of the speed sensor after every 330 feet covered by the machine
	Programmable range:	20 to 999 Steps of 1 pulse
	Default value: 200	

Automatic programming of parameter “C” (pulses of the speed sensor)

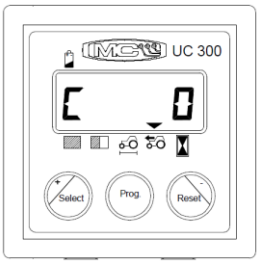

It is possible to program parameter C automatically: after entering the programming phase as instructed above, and with “C” shown on the display followed by the value currently programmed, press both the “+” and “-” buttons at the same time and the following appears on the display
At this point, travel 100 metres (or 330 feet) in the machine and the number will increase automatically on the display. After covering this distance, press the "Prog" button to confirm the data. It is advisable to repeat this operation at least twice. If you try to acquire a value of less than 20 pulses, “Err” appears on the display and the UC 300 retains the last valid value to have been saved.

Programming parameter “L” (working width)

This parameter is the working width of the machine in metres (or feet). Enter the programming phase as described above and edit the value with the “+” and “-” buttons; pressing and holding either button will speed up the editing process. After setting the required value, press "Prog" to confirm and exit the programming phase.

with “Un” = 0 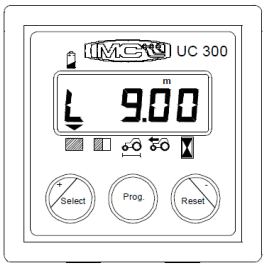	Name of parameter:	L
	Description:	Working width in metres
	Programmable range:	00.10 to 30.00 Steps of 0.01m
	Default value:	9.00

with “Un” = 1 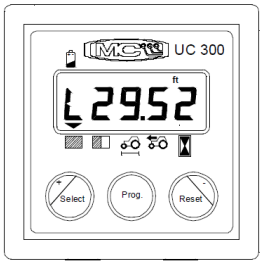	Name of parameter:	L
	Description:	Working width in feet
	Programmable range:	00.32 to 98.40 Steps of 0.01 feet
	Default value:	29.50

(For machines produced prior to May 2011)

CALIBRATION FACTORS FOR FARMSCAN HECTAREMETER

(See page 9 of Farmscan “Installation and Operating Instructions” booklet)

NOTE:

- Settings are for shaft sensor installation with two magnets mounted on the secondary shaft.
- For improved accuracy follow procedure outlined on page 9 of the “Installation and Operating Instructions” booklet (Shaft Sensor section)

USE THE FOLLOWING SETTINGS FOR JOHN SHEARER MACHINES

IMPLEMENT TYPE	IMPLEMENT SIZE	TYRE	H1	H2
6.90 TCD	21 ROW	16.9 x 28 x 6P	5133	3.78
	27 ROW	18.4 x 30 x 8P	5255	4.86
	33 ROW	23.1 x 30 x 8P	5168	5.94
	27 ROW 4 BIN	23.1 x 30 x 8P	5168	4.86
4.90 TCD	20 ROW	14.9 x 24 x 8P	5255	3.60
	20 ROW	16.9 x 28 x 6P	5133	3.60
	24 ROW	16.9 x 28 x 6P	5133	4.32
	28 ROW	18.4 x 30 x 8P	5255	5.04
	24 ROW 4 BIN	18.4 x 30 x 8P	5190	4.32
PASTURE DRILL	10 ROW	235/75 x 15 x 4P	5132	1.80
	13 ROW	235/75 x 15 x 4P	5132	2.34
	16 ROW	235/75 x 15 x 4P	5132	2.88
	19 ROW	235/75 x 15 x 4P	5132	3.42